SGS-THOMSON MICROELECTRONICS

AM81214-060

RF & MICROWAVE TRANSISTORS L-BAND RADAR APPLICATIONS

- REFRACTORY/GOLD METALLIZATION
- EMITTER SITE BALLASTED
- RUGGEDIZED VSWR ∞:1
- LOW THERMAL RESISTANCE
- INPUT/OUTPUT MATCHING
- OVERLAY GEOMETRY
- METAL/CERAMIC HERMETIC PACKAGE
- P_{OUT} = 55 W MIN. WITH 6.6 dB GAIN

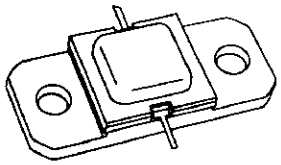

.400 x .400 2NLFL (S042)
hermetically sealed

ORDER CODE	BRANDING
AM81214-060	81214-60

DESCRIPTION

The AM81214-060 device is a high power transistor specifically designed for L-Band radar pulsed output and driver applications.

The device is capable of operation over a wide range of pulse widths, duty cycles, and temperatures and is capable of withstanding ∞:1 output VSWR at rated RF conditions. Low RF thermal resistance and computerized automatic wire bonding techniques ensure high reliability and product consistency.

The AM81214-060 is supplied in the AMPAC™ Hermetic Metal/Ceramic package with internal Input/Output matching structures.

PIN CONNECTION

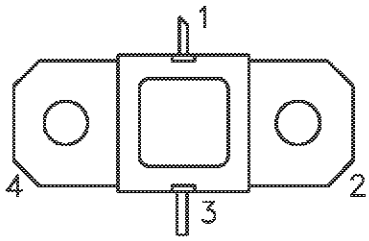

1. Collector
2. Base
3. Emitter
4. Base

ABSOLUTE MAXIMUM RATINGS (T_{case} = 25°C)

Symbol	Parameter	Value	Unit
P_{DISS}	Power Dissipation* ($T_C \leq 100°C$)	107	W
I_C	Device Current*	5.0	A
V_{CC}	Collector-Supply Voltage*	32	V
T_J	Junction Temperature (Pulsed RF Operation)	250	°C
T_{STG}	Storage Temperature	– 65 to +200	°C

THERMAL DATA

$R_{TH(j-c)}$	Junction-Case Thermal Resistance*	1.4	°C/W

*Applies only to rated RF amplifier operation

ELECTRICAL SPECIFICATIONS (T_{case} = 25°C)

STATIC

Symbol	Test Conditions		Value			Unit
			Min.	Typ.	Max.	
BV_{CBO}	I_C = 20mA	I_E = 0mA	55	—	—	V
BV_{EBO}	I_E = 2mA	I_C = 0mA	3.5	—	—	V
BV_{CER}	IC = 40mA	R_{BE} = 10Ω	55	—	—	V
I_{CES}	V_{BE} = 0V	V_{CE} = 28V	—	—	10	mA
h_{FE}	V_{CE} = 5V	I_C = 2A	15	—	150	—

DYNAMIC

Symbol	Test Conditions			Value			Unit
				Min.	Typ.	Max.	
P_{OUT}	f = 1215 — 1400MHz	P_{IN} = 12W	V_{CC} = 28V	55	63	—	W
ηc	f = 1215 — 1400MHz	P_{IN} = 12W	V_{CC} = 28V	50	57	—	%
G_P	f = 1215 — 1400MHz	P_{IN} = 12W	V_{CC} = 28V	6.6	7.2	—	dB

Note: Pulse Width = 1000µS
Duty Cycle = 10%

TYPICAL PERFORMANCE

RELATIVE POWER OUTPUT & COLLECTOR EFFICIENCY vs COLLECTOR VOLTAGE

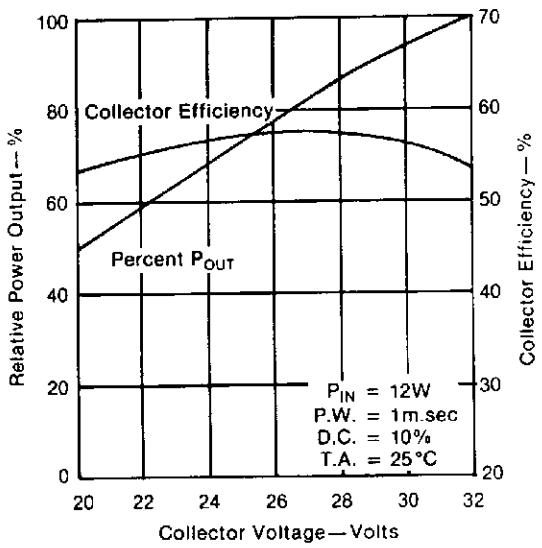

TYPICAL BROADBAND POWER AMPLIFIER

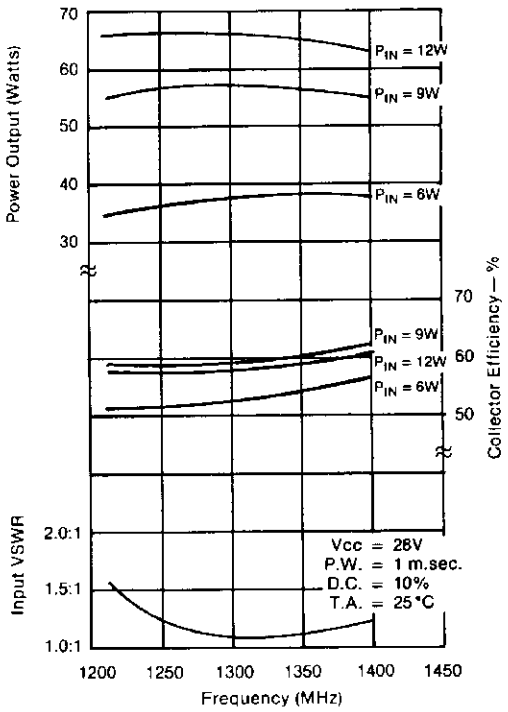

MAXIMUM THERMAL RESISTANCE vs PULSE WIDTH

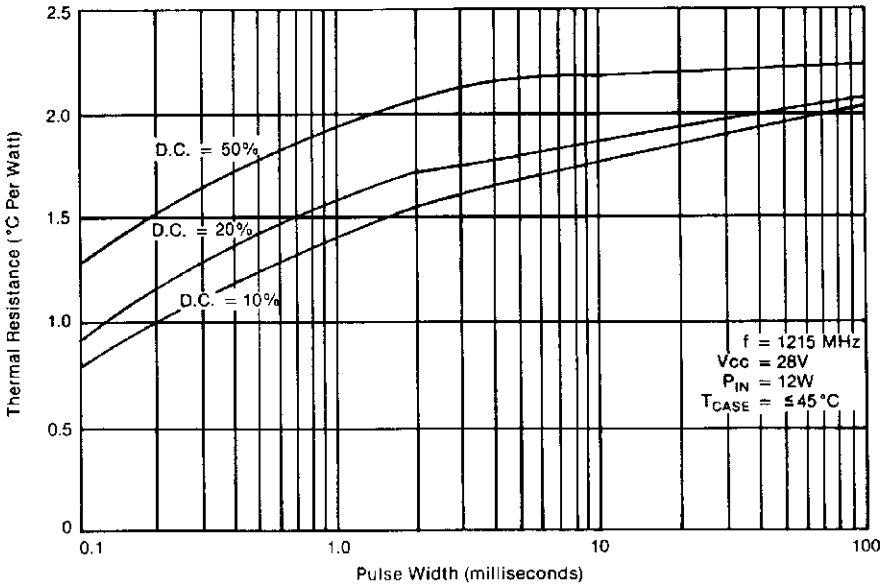

IMPEDANCE DATA

TYPICAL INPUT IMPEDANCE

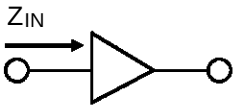

P_{IN} = 12.0 W
V_{CC} = 28 V
Z_0 = 50 ohms

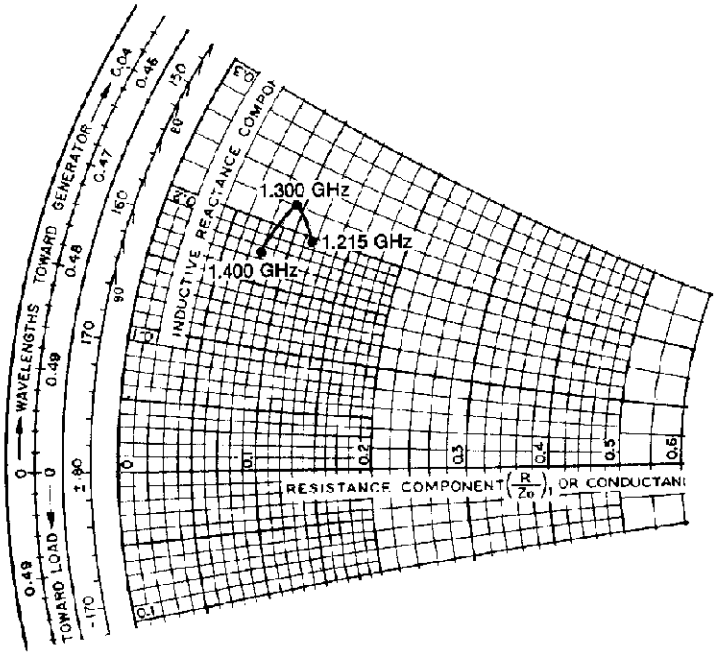

FREQ.	Z_{IN} (Ω)	Z_{CL} (Ω)
L = 1.2 GHz	6.0 + j 10.0	7.0 – j 10.0
M = 1.3 GHz	4.5 + j 11.0	6.0 – j 9.5
H = 1.4 GHz	4.0 + j 9.0	5.0 – j 9.0

TYPICAL COLLECTOR LOAD IMPEDANCE

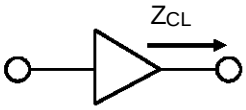

P_{IN} = 12.0 W
V_{CC} = 28 V
Z_0 = 50 ohms

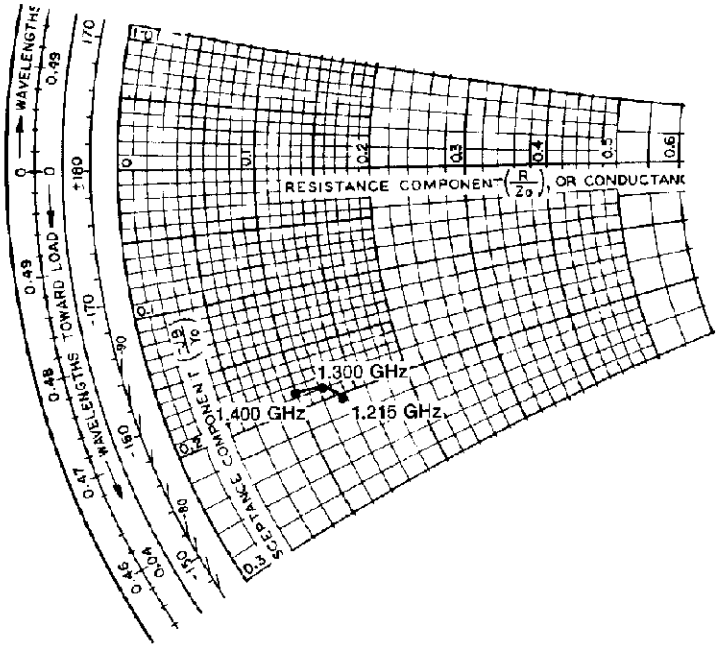

TEST CIRCUIT

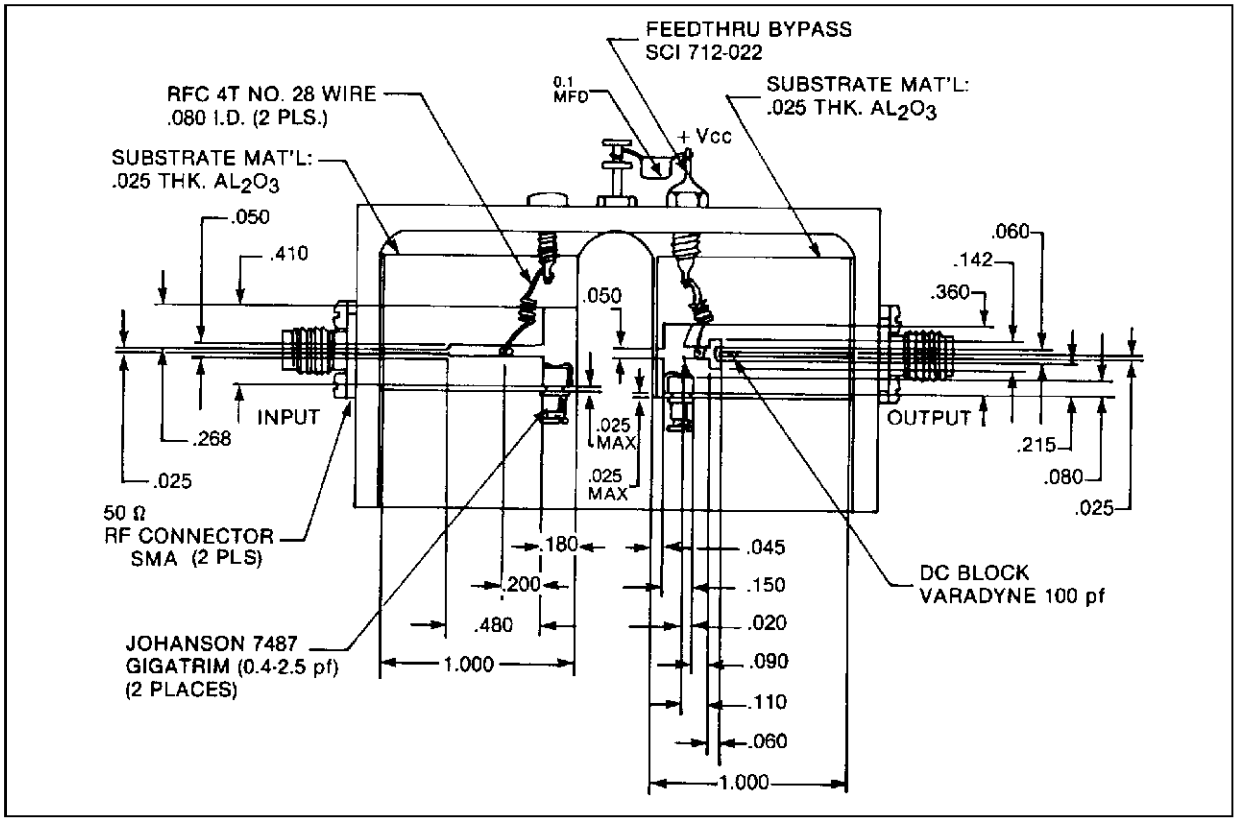

PACKAGE MECHANICAL DATA

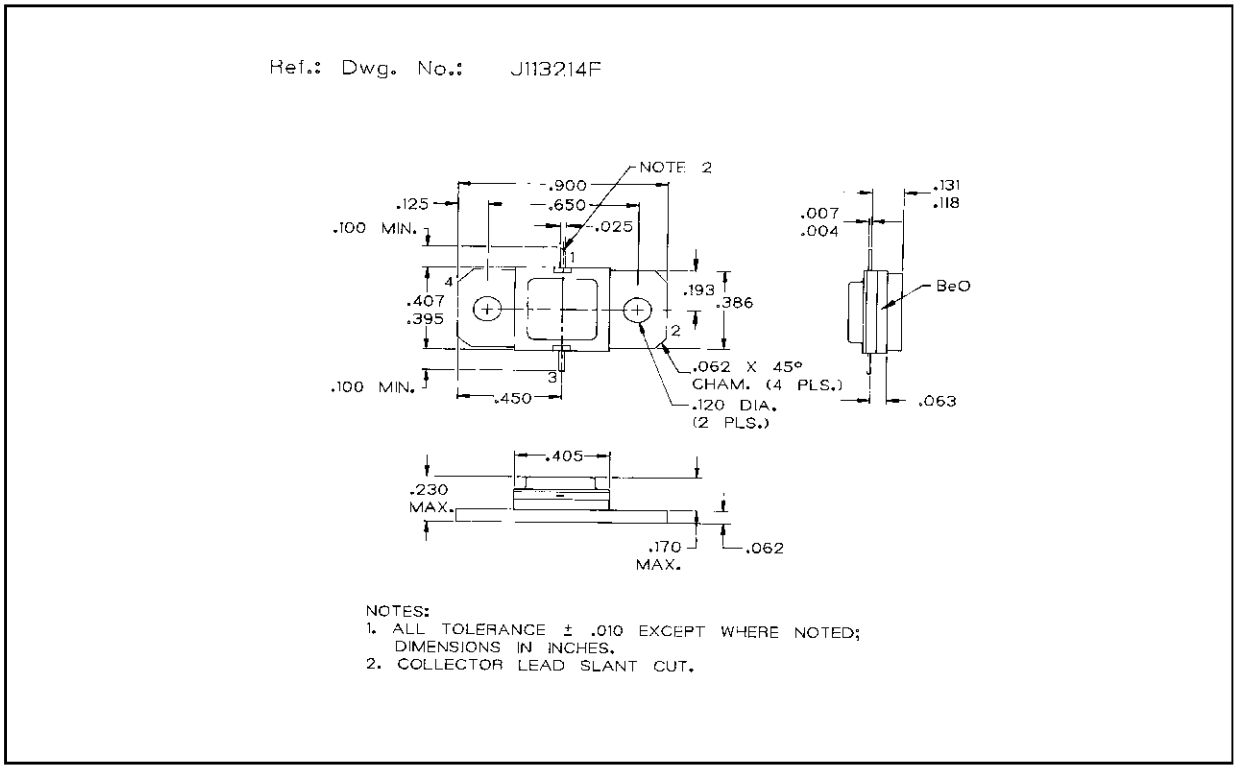

Information furnished is believed to be accurate and reliable. However, SGS-THOMSON Microelectronics assumes no responsability for the consequences of use of such information nor for any infringement of patents or other rights of third parties which may results from its use. No license is granted by implication or otherwise under any patent or patent rights of SGS-THOMSON Microelectronics. Specifications mentioned in this publication are subject to change without notice. This publication supersedes and replaces all information previously supplied.
SGS-THOMSON Microelectronics products are not authorized for use as critical components in life support devices or systems without express written approval of SGS-THOMSON Microelectonics.

© 1994 SGS-THOMSON Microelectronics - All Rights Reserved

SGS-THOMSON Microelectronics GROUP OF COMPANIES
Australia - Brazil - France - Germany - Hong Kong - Italy - Japan - Korea - Malaysia - Malta - Morocco - The Netherlands - Singapore - Spain - Sweden - Switzerland - Taiwan - Thailand - United Kingdom - U.S.A