HCF4556B

DUAL BINARY TO 1 OF 4 DECODER/DEMULTIPLEXER OUTPUT LOW ON SELECT

- EXPANDABLE WITH MULTIPLE PACKAGES
- STANDARDIZED SYMMETRICAL OUTPUT CHARACTERISTICS
- QUIESCENT CURRENT SPECIFIED UP TO 20V
- 5V, 10V AND 15V PARAMETRIC RATINGS
- INPUT LEAKAGE CURRENT I_I = 100nA (MAX) AT V_{DD} = 18V T_A = 25°C
- 100% TESTED FOR QUIESCENT CURRENT
- MEETS ALL REQUIREMENTS OF JEDEC JESD13B " STANDARD SPECIFICATIONS FOR DESCRIPTION OF B SERIES CMOS DEVICES"

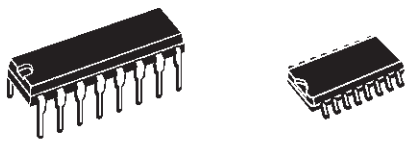

DIP SOP

ORDER CODES

PACKAGE	TUBE	T & R
DIP	HCF4556BEY	
SOP	HCF4556BM1	HCF4556M013TR

DESCRIPTION

The HCF4556B is a monolithic integrated circuit fabricated in Metal Oxide Semiconductor technology available in DIP and SOP packages.
The HCF4556B is a dual 1 of 4 decoder/ demultiplexer. Each decoder has two select inputs (A and B), an Enable input ($\overline{E}$), and four mutually exclusive outputs. On the HCF4556B the outputs are low on select. When the Enable input is high, the outputs is high regardless of the state of the select inputs A and B.

PIN CONNECTION

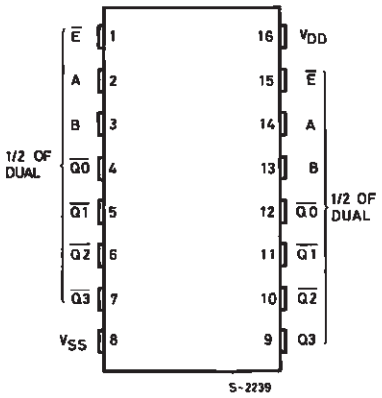

IINPUT EQUIVALENT CIRCUIT

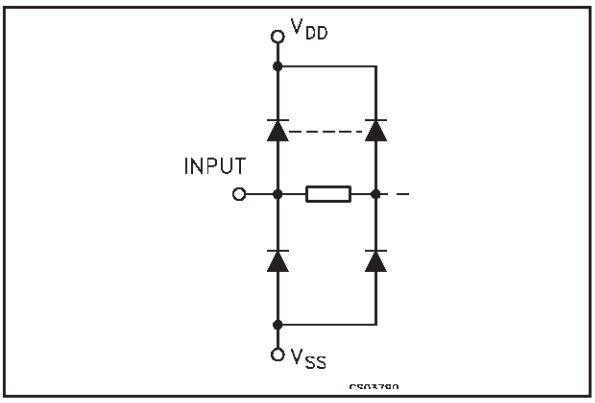

PIN DESCRIPTION

PIN No	SYMBOL	NAME AND FUNCTION
2, 3	A, B	Select Inputs (1/2 of dual)
1	$\overline{E}$	Enable Input (1/2 of dual)
4, 5, 6, 7	$\overline{Q0}$ to $\overline{Q3}$	Outputs (1/2 of dual)
14, 13	A, B	Select Inputs (1/2 of dual)
15	$\overline{E}$	Enable Input (1/2 of dual)
12, 11, 10, 9	$\overline{Q0}$ to $\overline{Q3}$	Outputs (1/2 of dual)
8	V_{SS}	Negative Supply Voltage
16	V_{DD}	Positive Supply Voltage

TRUTH TABLE

INPUTS ENABLE SELECT			OUTPUTS			
$\overline{E}$	B	A	$\overline{Q3}$	$\overline{Q2}$	$\overline{Q1}$	$\overline{Q0}$
L	L	L	H	H	H	L
L	L	H	H	H	L	H
L	H	L	H	L	H	H
L	H	H	L	H	H	H
H	X	X	H	H	H	H

X : Don't Care

FUNCTIONAL DIAGRAM

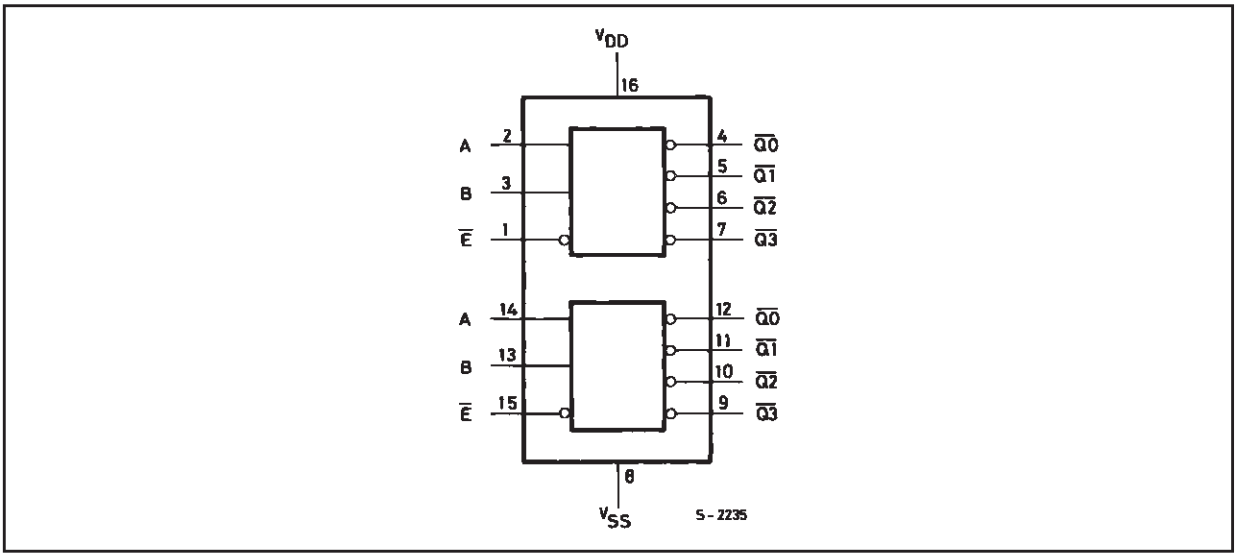

LOGIC DIAGRAM

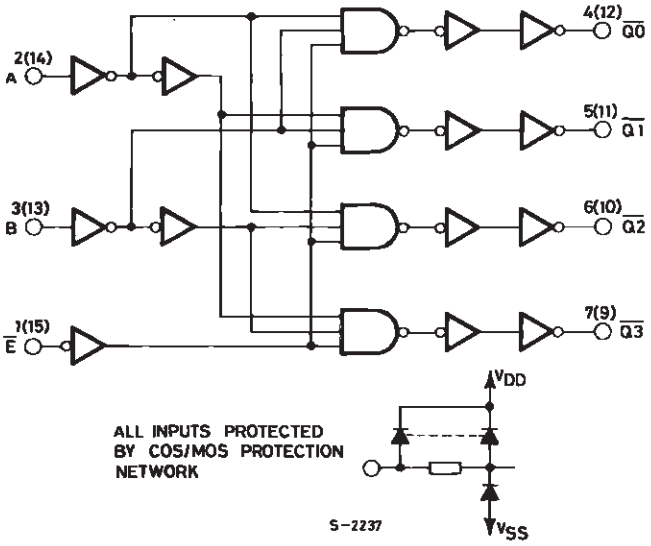

ABSOLUTE MAXIMUM RATINGS

Symbol	Parameter	Value	Unit
V_{DD}	Supply Voltage	-0.5 to +22	V
V_I	DC Input Voltage	-0.5 to V_{DD} + 0.5	V
I_I	DC Input Current	± 10	mA
P_D	Power Dissipation per Package	200	mW
	Power Dissipation per Output Transistor	100	mW
T_{op}	Operating Temperature	-55 to +125	°C
T_{stg}	Storage Temperature	-65 to +150	°C

Absolute Maximum Ratings are those values beyond which damage to the device may occur. Functional operation under these conditions is not implied.
All voltage values are referred to V_{SS} pin voltage.

RECOMMENDED OPERATING CONDITIONS

Symbol	Parameter	Value	Unit
V_{DD}	Supply Voltage	3 to 20	V
V_I	Input Voltage	0 to V_{DD}	V
T_{op}	Operating Temperature	-55 to 125	°C

DC SPECIFICATIONS

Symbol	Parameter	Test Condition				Value							Unit
		V_I (V)	V_O (V)	$\|I_O\|$ (µA)	V_{DD} (V)	T_A = 25°C			-40 to 85°C		-55 to 125°C		
						Min.	Typ.	Max.	Min.	Max.	Min.	Max.	
I_L	Quiescent Current	0/5			5		0.04	5		150		150	µA
		0/10			10		0.04	10		300		300	
		0/15			15		0.04	20		600		600	
		0/20			20		0.08	100		3000		3000	
V_{OH}	High Level Output Voltage	0/5		<1	5	4.95			4.95		4.95		V
		0/10		<1	10	9.95			9.95		9.95		
		0/15		<1	15	14.95			14.95		14.95		
V_{OL}	Low Level Output Voltage	5/0		<1	5		0.05			0.05		0.05	V
		10/0		<1	10		0.05			0.05		0.05	
		15/0		<1	15		0.05			0.05		0.05	
V_{IH}	High Level Input Voltage		0.5/4.5	<1	5	3.5			3.5		3.5		V
			1/9	<1	10	7			7		7		
			1.5/13.5	<1	15	11			11		11		
V_{IL}	Low Level Input Voltage		4.5/0.5	<1	5			1.5		1.5		1.5	V
			9/1	<1	10			3		3		3	
			13.5/1.5	<1	15			4		4		4	
I_{OH}	Output Drive Current	0/5	2.5	<1	5	-1.36	-3.2		-1.1		-1.1		mA
		0/5	4.6	<1	5	-0.44	-1		-0.36		-0.36		
		0/10	9.5	<1	10	-1.1	-2.6		-0.9		-0.9		
		0/15	13.5	<1	15	-3.0	-6.8		-2.4		-2.4		
I_{OL}	Output Sink Current	0/5	0.4	<1	5	0.44	1		0.36		0.36		mA
		0/10	0.5	<1	10	1.1	2.6		0.9		0.9		
		0/15	1.5	<1	15	3.0	6.8		2.4		2.4		
I_I	Input Leakage Current	0/18	Any Input		18		$\pm 10^{-5}$	±0.1		±1		±1	µA
C_I	Input Capacitance		Any Input				5	7.5					pF

The Noise Margin for both "1" and "0" level is: 1V min. with V_{DD}=5V, 2V min. with V_{DD}=10V, 2.5V min. with V_{DD}=15V

DYNAMIC ELECTRICAL CHARACTERISTICS (T_{amb} = 25°C, C_L = 50pF, R_L = 200KΩ, $t_r = t_f$ = 20 ns)

Symbol	Parameter	Test Condition		Value (*)			Unit
		V_{DD} (V)		Min.	Typ.	Max.	
t_{PLH} t_{PHL}	Propagation Delay Time	5	A or B Input to any Output		220	440	ns
		10			95	190	
		15			70	140	
t_{PLH} t_{PHL}	Propagation Delay Time	5	$\overline{E}$ Input to any Output		200	400	ns
		10			85	170	
		15			65	130	
t_{TLH} t_{THL}	Transition Time	5			100	200	ns
		10			50	100	
		15			40	80	

(*) Typical temperature coefficient for all V_{DD} value is 0.3 %/°C.

TYPICAL APPLICATIONS

1 OF 16 DECODER USING HCF4555B AND HCF4556B

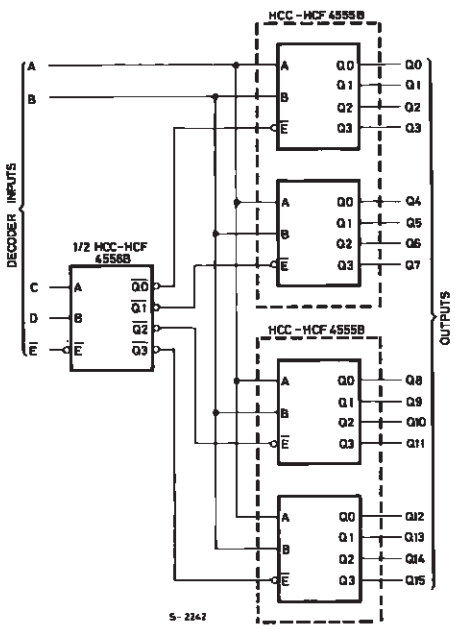

TRUTH TABLE

INPUTS					Q OUTPUTS															
E	D	C	B	A	0	1	2	3	4	5	6	7	8	9	10	11	12	13	14	15
0	0	0	0	0	1	0	0	0	0	0	0	0	0	0	0	0	0	0	0	0
0	0	0	0	1	0	1	0	0	0	0	0	0	0	0	0	0	0	0	0	0
0	0	0	1	0	0	0	1	0	0	0	0	0	0	0	0	0	0	0	0	0
0	0	0	1	1	0	0	0	1	0	0	0	0	0	0	0	0	0	0	0	0
0	0	1	0	0	0	0	0	0	1	0	0	0	0	0	0	0	0	0	0	0
0	0	1	0	1	0	0	0	0	0	1	0	0	0	0	0	0	0	0	0	0
0	0	1	1	0	0	0	0	0	0	0	1	0	0	0	0	0	0	0	0	0
0	0	1	1	1	0	0	0	0	0	0	0	1	0	0	0	0	0	0	0	0
0	1	0	0	0	0	0	0	0	0	0	0	0	1	0	0	0	0	0	0	0
0	1	0	0	1	0	0	0	0	0	0	0	0	0	1	0	0	0	0	0	0
0	1	0	1	0	0	0	0	0	0	0	0	0	0	0	1	0	0	0	0	0
0	1	0	1	1	0	0	0	0	0	0	0	0	0	0	0	1	0	0	0	0
0	1	1	0	0	0	0	0	0	0	0	0	0	0	0	0	0	1	0	0	0
0	1	1	0	1	0	0	0	0	0	0	0	0	0	0	0	0	0	1	0	0
0	1	1	1	0	0	0	0	0	0	0	0	0	0	0	0	0	0	0	1	0
0	1	1	1	1	0	0	0	0	0	0	0	0	0	0	0	0	0	0	0	1
1	X	X	X	X	0	0	0	0	0	0	0	0	0	0	0	0	0	0	0	0

TEST CIRCUIT

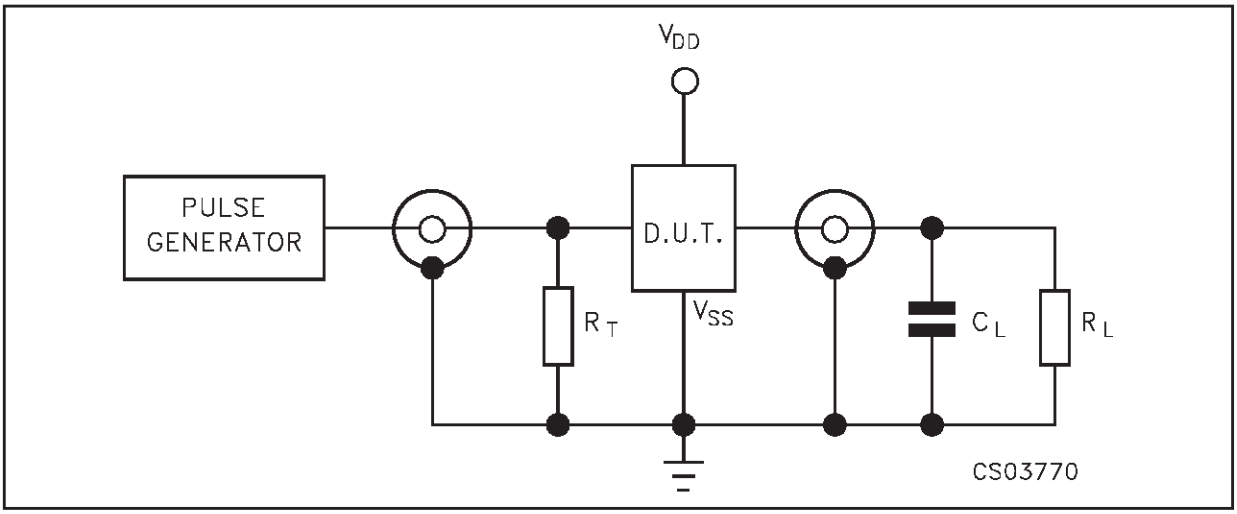

C_L = 50pF or equivalent (includes jig and probe capacitance)
R_L = 200KΩ
R_T = Z_{OUT} of pulse generator (typically 50Ω)

WAVEFORM 1 : PROPAGATION DELAY TIMES (INPUT TO $\overline{Q3}$ OUTPUT) (f=1MHz; 50% duty cycle)

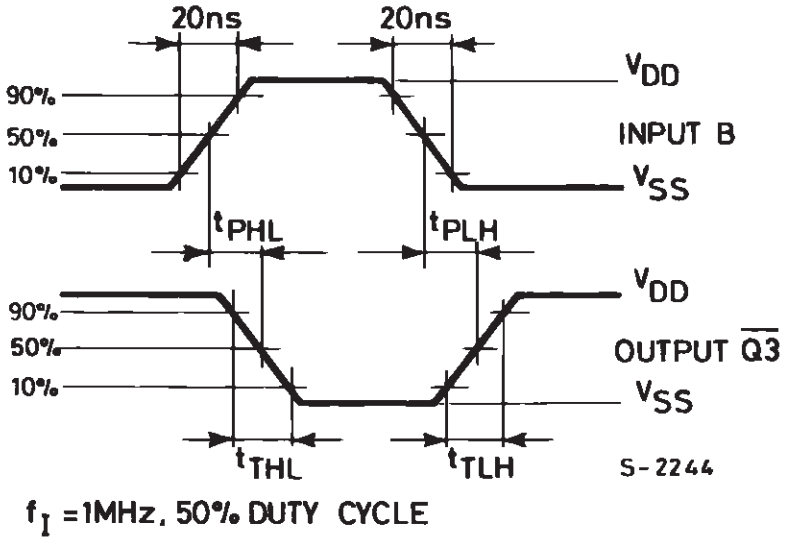

WAVEFORM 2 : PROPAGATION DELAY TIMES ($\overline{E}$ INPUT TO $\overline{Q3}$ OUTPUT) (f=1MHz; 50% duty cycle)

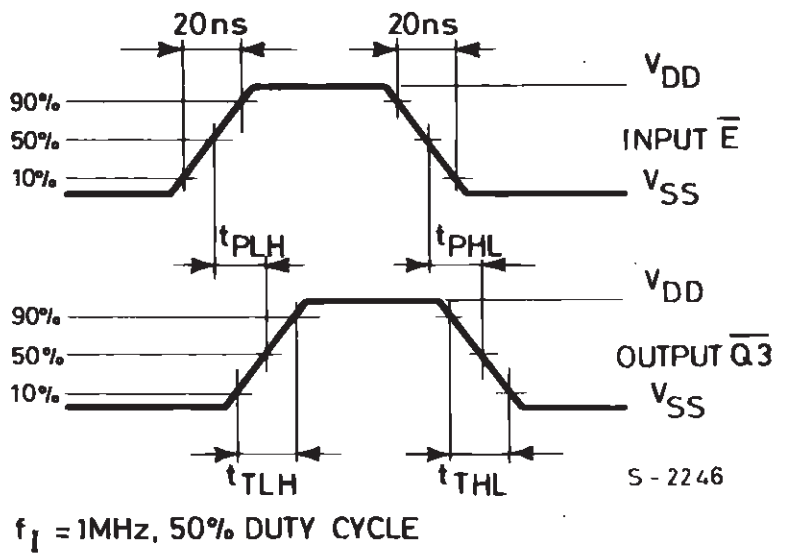

Plastic DIP-16 (0.25) MECHANICAL DATA

DIM.	mm.			inch		
	MIN.	TYP	MAX.	MIN.	TYP.	MAX.
a1	0.51			0.020		
B	0.77		1.65	0.030		0.065
b		0.5			0.020	
b1		0.25			0.010	
D			20			0.787
E		8.5			0.335	
e		2.54			0.100	
e3		17.78			0.700	
F			7.1			0.280
I			5.1			0.201
L		3.3			0.130	
Z			1.27			0.050

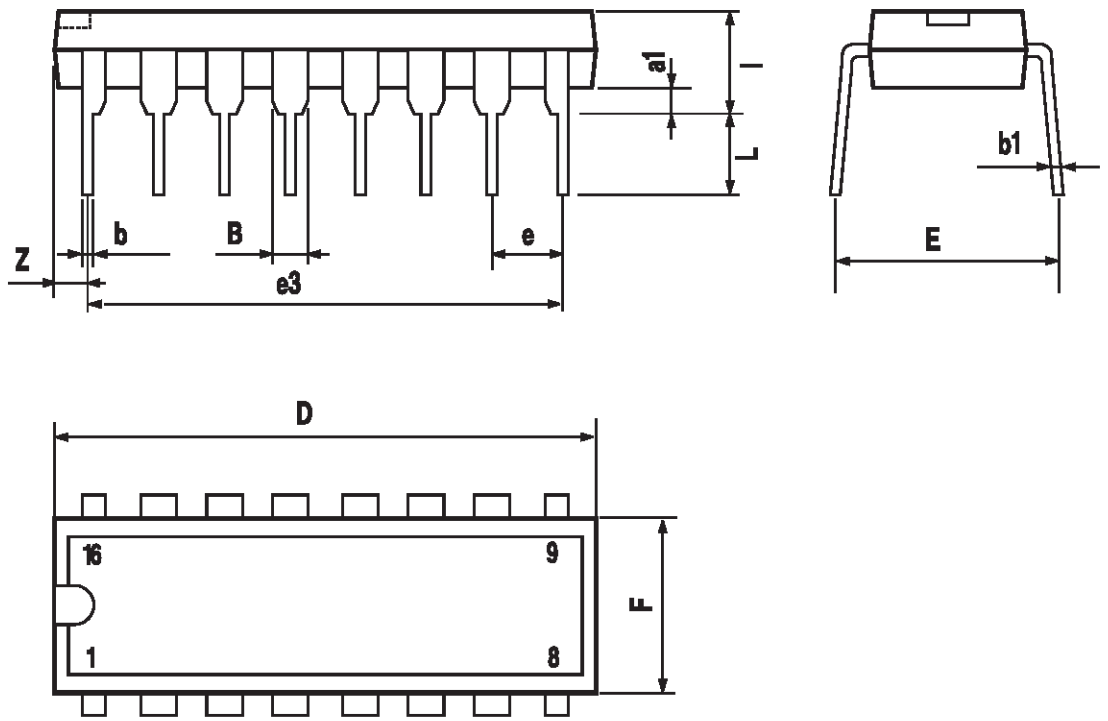

P001C

SO-16 MECHANICAL DATA

DIM.	mm.			inch		
	MIN.	TYP	MAX.	MIN.	TYP.	MAX.
A			1.75			0.068
a1	0.1		0.2	0.003		0.007
a2			1.65			0.064
b	0.35		0.46	0.013		0.018
b1	0.19		0.25	0.007		0.010
C		0.5			0.019	
c1	45° (typ.)					
D	9.8		10	0.385		0.393
E	5.8		6.2	0.228		0.244
e		1.27			0.050	
e3		8.89			0.350	
F	3.8		4.0	0.149		0.157
G	4.6		5.3	0.181		0.208
L	0.5		1.27	0.019		0.050
M			0.62			0.024
S	8° (max.)					

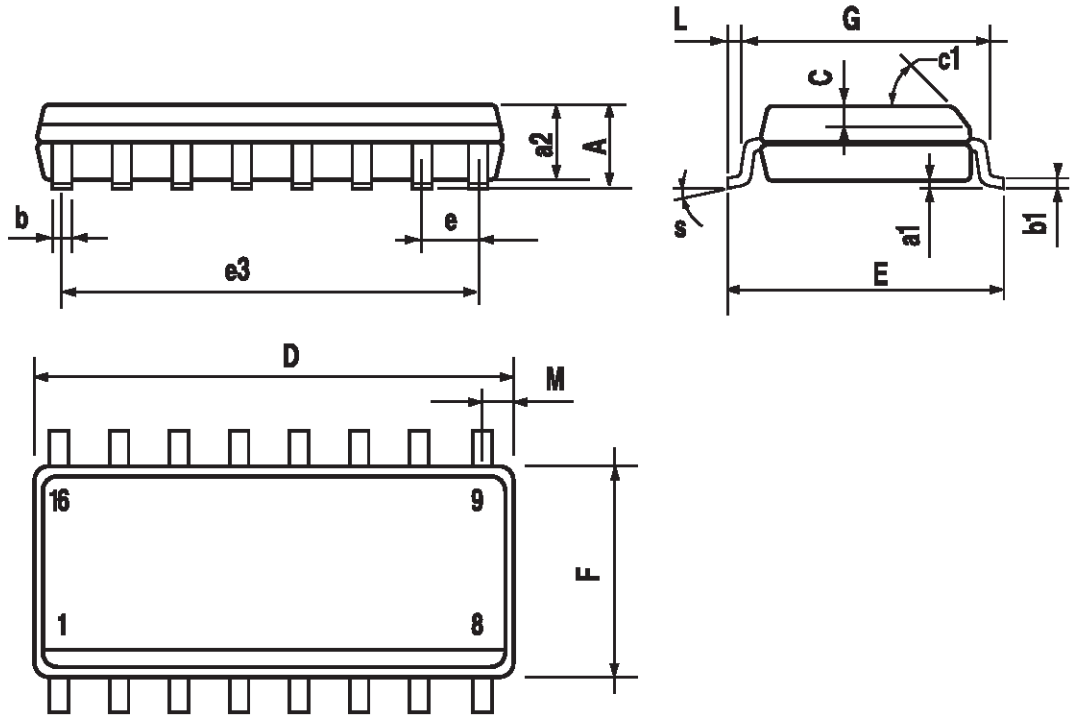

PO13H