SGS-THOMSON MICROELECTRONICS

MC1458
MC1558

DUAL OPERATIONAL AMPLIFIERS

- LOW POWER CONSUMPTION
- LARGE INPUT VOLTAGE RANGE
- NO LATCH-UP
- HIGH GAIN
- SHORT-CIRCUIT PROTECTION
- NO FREQUENCY COMPENSATION REQUIRED

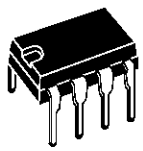

N
DIP8
(Plastic Package)

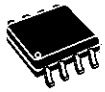

D
SO8
(Plastic Micropackage)

DESCRIPTION

The MC1458 is a high performance monolithic dual operational amplifier intended for a wide range of analog
applications:

- Summing amplifier
- Voltage follower
- Integrator
- Active filter
- Function generator

The high gain and wide range of operating voltages provide superior performance in integrator, summing amplifier, and general feed back applications.

ORDER CODES

Part Number	Temperature Range	Package	
		N	D
MC1458	0, +70°C	•	•
MC1458I	–40, +105°C	•	•
MC1558	–55, +125°C	•	•
Example : MC1458N			

PIN CONNECTIONS (top view)

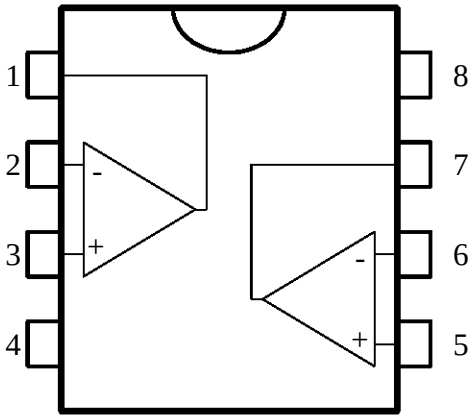

1 - Output 1
2 - Inverting input 1
3 - Non-inverting input 1
4 - V_{CC}^-
5 - Non-inverting input 2
6 - Inverting input 2
7 - Output 2
8 - V_{CC}^+

SCHEMATIC DIAGRAM

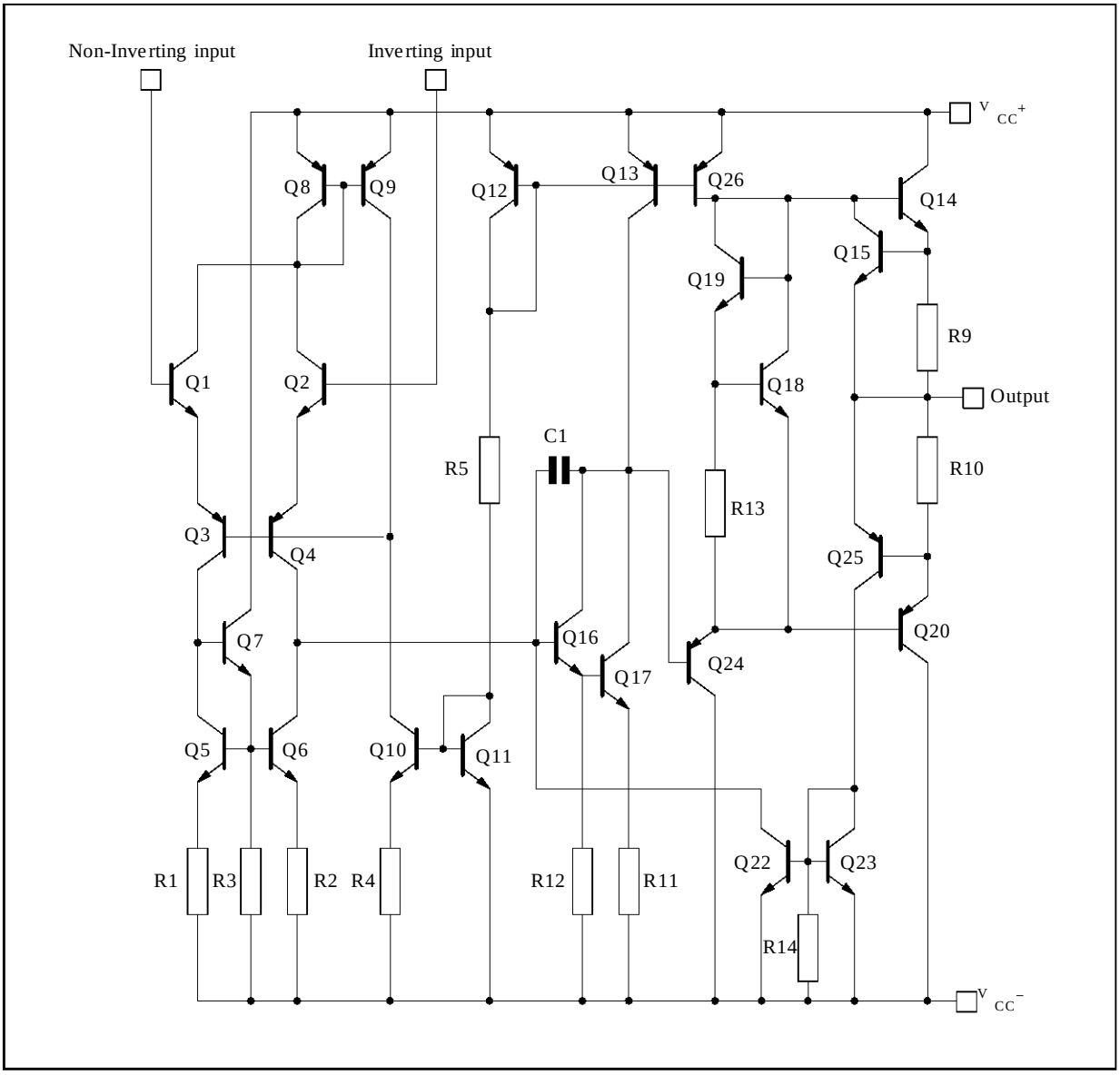

ABSOLUTE MAXIMUM RATINGS

Symbol	Parameter	MC1458	MC1458I	MC1558	Unit
V_{CC}	Supply Voltage	±22	±22	±22	V
V_i	Input Voltage	±15	±15	±15	V
V_{id}	Differential Input Voltage	±30	±30	±30	V
P_{tot}	Power Dissipation D Suffix N Suffix	 300 500			mW
	Output Short-circuit Duration	Infinite			
T_{oper}	Operating Free-air Temperature Range	0 to +70	–40 to +105	–55 to +125	°C
T_{stg}	Storage Temperature Range	–65 to +150	–65 to +150	–65 to +150	°C

ELECTRICAL CHARACTERISTICS

V_{CC} = ±15V, T_{amb} = 25°C, (unless otherwise specified)

Symbol	Parameter	MC1458 - 1458I - 1558			Unit
		Min.	Typ.	Max.	
V_{io}	Input Offset Voltage ($R_S \leq 10k\Omega$) T_{amb} = 25°C $T_{min.} \leq T_{amb} \leq T_{max.}$		1	5 6	mV
I_{io}	Input Offset Current T_{amb} = 25°C $T_{min.} \leq T_{amb} \leq T_{max.}$		2	200 300	nA
I_{ib}	Input Bias Current T_{amb} = 25°C $T_{min.} \leq T_{amb} \leq T_{max.}$		30	500 800	nA
A_{vd}	Large Signal Voltage Gain (V_O = ±10V, R_L = 2kΩ) T_{amb} = 25°C $T_{min.} \leq T_{amb} \leq T_{max.}$	50 25	200		V/mV
SVR	Supply Voltage Rejection Ratio ($R_S \leq 10k\Omega$) T_{amb} = 25°C $T_{min.} \leq T_{amb} \leq T_{max.}$	77 77	90		dB
I_{CC}	Supply Current, all Amp, no Load T_{amb} = 25°C $T_{min.} \leq T_{amb} \leq T_{max.}$		2.3	5 6	mA
V_{icm}	Input Common Mode Voltage Range T_{amb} = 25°C $T_{min.} \leq T_{amb} \leq T_{max.}$	±12 ±12			V
CMR	Common-mode Rejection Ratio ($R_S \leq 10$ kΩ) T_{amb} = 25°C $T_{min} \leq T_{amb} \leq T_{max}$	70 70	90		dB
I_{OS}	Output Short-circuit Current T_{amb} = 25°C	10	20	35	mA
$\pm V_{OPP}$	Output Voltage Swing T_{amb} = 25°C R_L = 10kΩ R_L = 2kΩ $T_{min.} \leq T_{amb} \leq T_{max.}$ R_L = 10kΩ R_L = 2kΩ	12 10 12 10	14 13		V
SR	Slew Rate (V_I = ±10V, R_L = 2kΩ,C_L = 100pF, T_{amb} = 25°C, unity gain)	0.2	0.8		V/µs
t_r	Rise Time (V_I = 20mV, R_L = 2kΩ, C_L = 100pF, T_{amb} = 25°C, unity gain)		0.3		µs
K_{OV}	Overshoot (V_I = 20mV, R_L = 2kΩ, C_L = 100pF, T_{amb} = 25°C, unity gain)		5		%
R_I	Input Resistance	0.3	2		MΩ
Zic	Common-mode Input Impedance		200		MΩ
C_I	Input Capacitance		1.4		pF
R_O	Output Resistance		75		Ω
FPB	Full Power Bandwidth (R_L = 2kΩ, $V_O \geq$ ±10V, A_{VD} = 1, THD ≤ 5%)		14		KHz
B	Unity Gain Bandwidth (V_I = 10mV, R_L = 2kΩ, C_L = 100pF, T_{amb} = 25°C)		1		MHz

ELECTRICAL CHARACTERISTICS (continued)

Symbol	Parameter	MC1458 - 1458I MC1558			Unit
		Min.	Typ.	Max.	
GBP	Gain Bandwidth Product (V_I = 10mV, R_L = 2kΩ, C_L = 100pF, f = 100kHz, T_{amb} = 25°C)	0.4	1		MHz
THD	Total Harmonic Distortion (f = 1kHz, A_V = 20dB, R_L = 2kΩ, V_O = $2V_{PP}$, C_L = 100pF, T_{amb} = 25°C)		0.02		%
e_n	Equivalent Input Noise Voltage (f = kHz, R_s = 100Ω)		45		$\frac{nV}{\sqrt{Hz}}$
∅m	Phase Margin		65		Degrees
Am	Gain Margin		11		dB
V_{O1}/V_{O2}	Channel Separation		120		dB

OPEN LOOP VOLTAGE GAIN

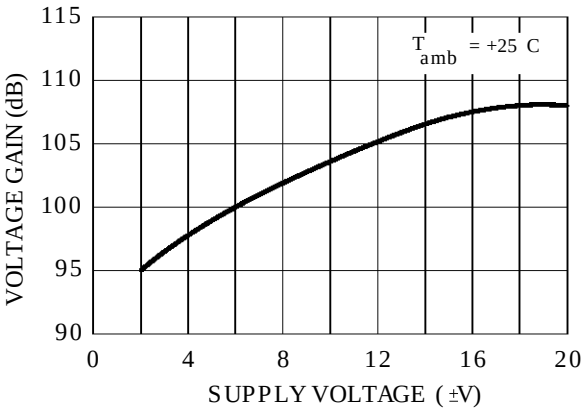

OPEN LOOP FREQUENCY RESPONSE

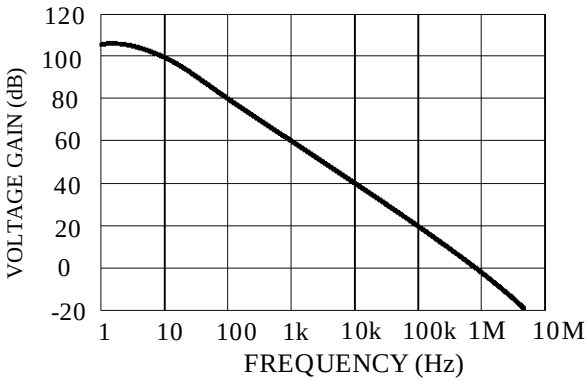

POWER BANDWIDTH (LARGE SIGNAL SWING)

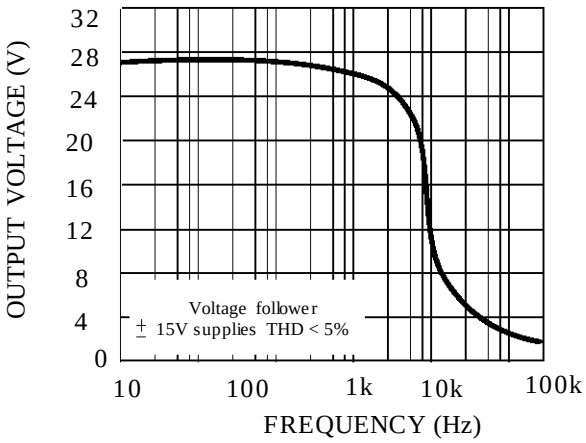

POWER CONSUMPTION

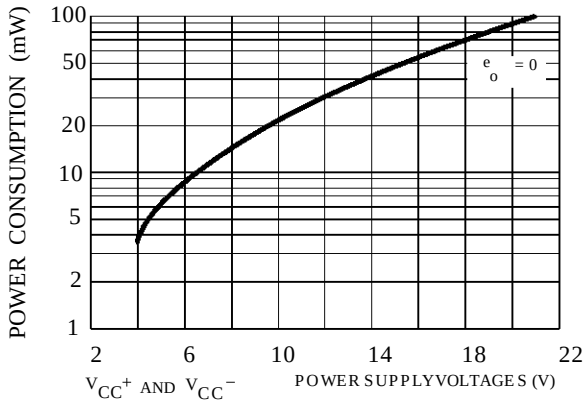

OUTPUT VOLTAGE SWING

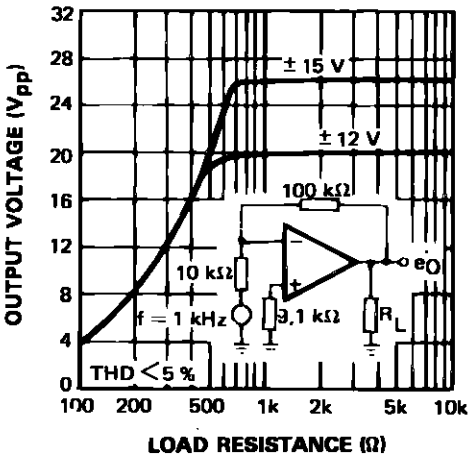

OUTPUT NOISE VOLTAGE

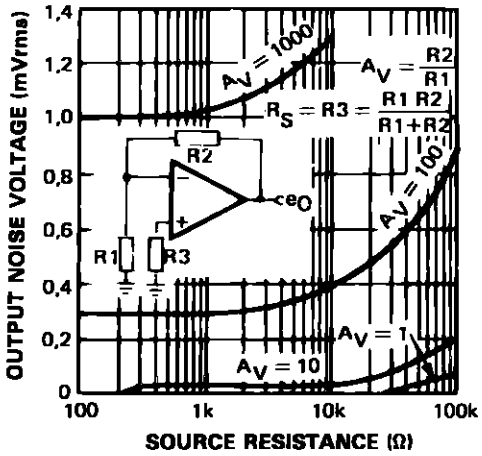

TRANSIENT RESPONSE

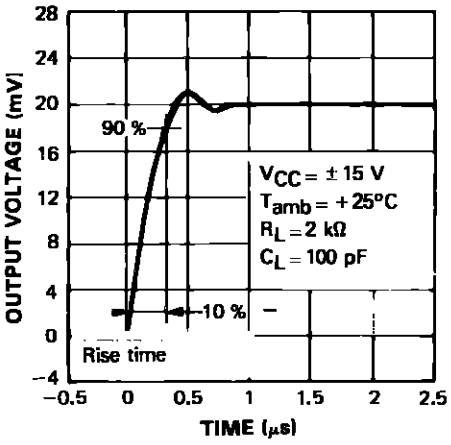

VOLTAGE FOLLOWER LARGE SIGNAL PULSE RESPONSE

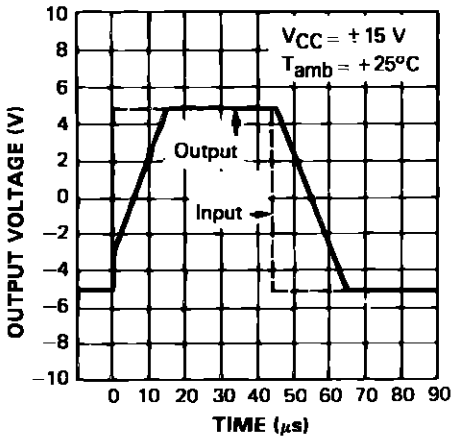

FREQUENCY CHARACTERISTICS

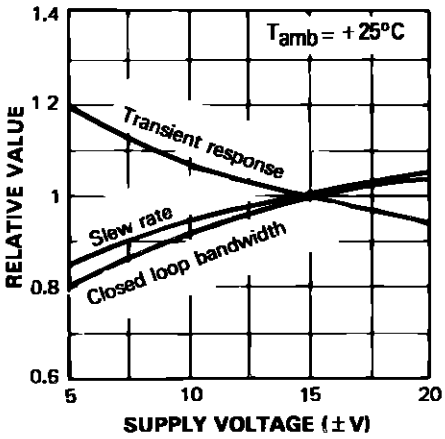

FREQUENCY CHARACTERISTICS

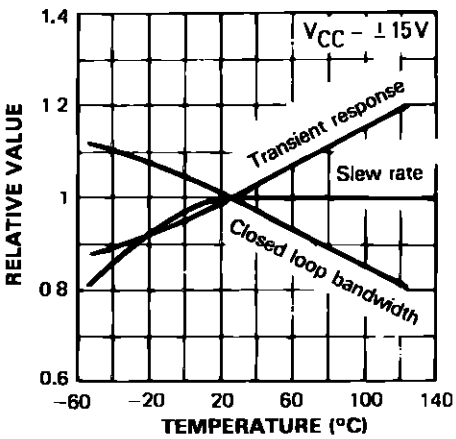

TYPICAL APPLICATIONS

LOW PASS FILTER

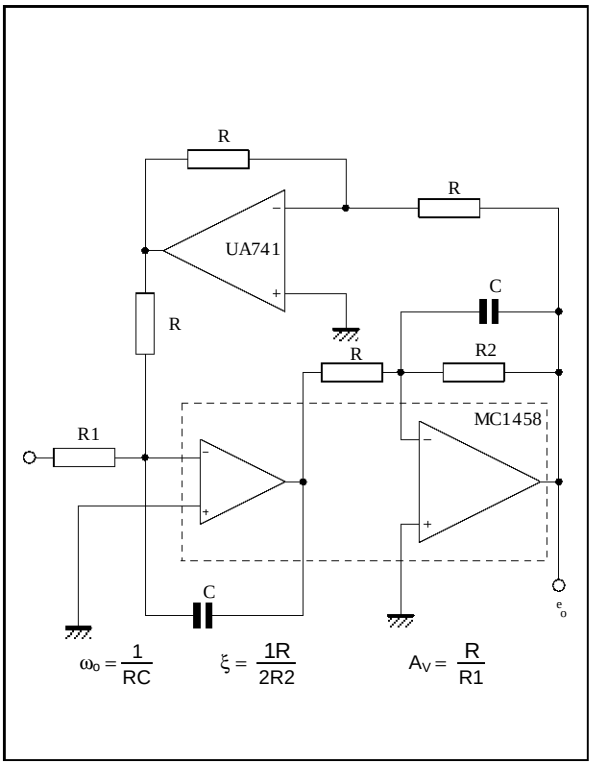

GIRATOR

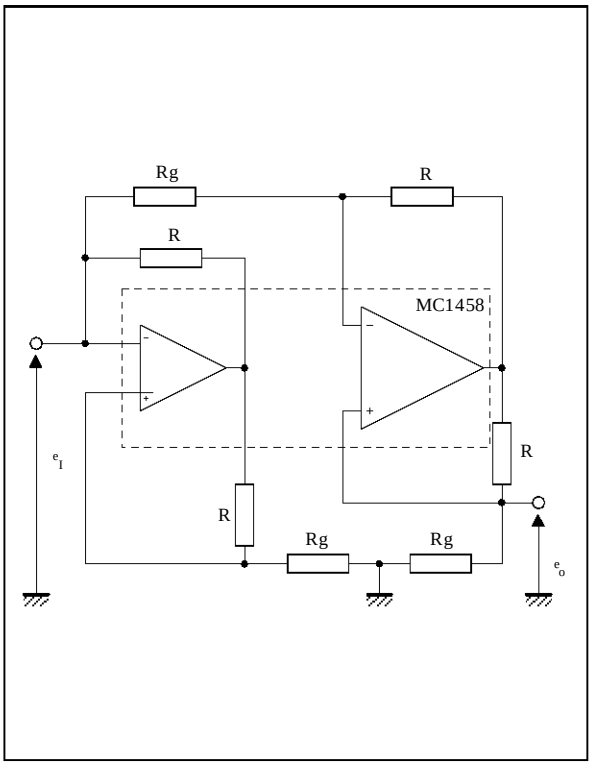

TURNABLE NOTCH FILTER

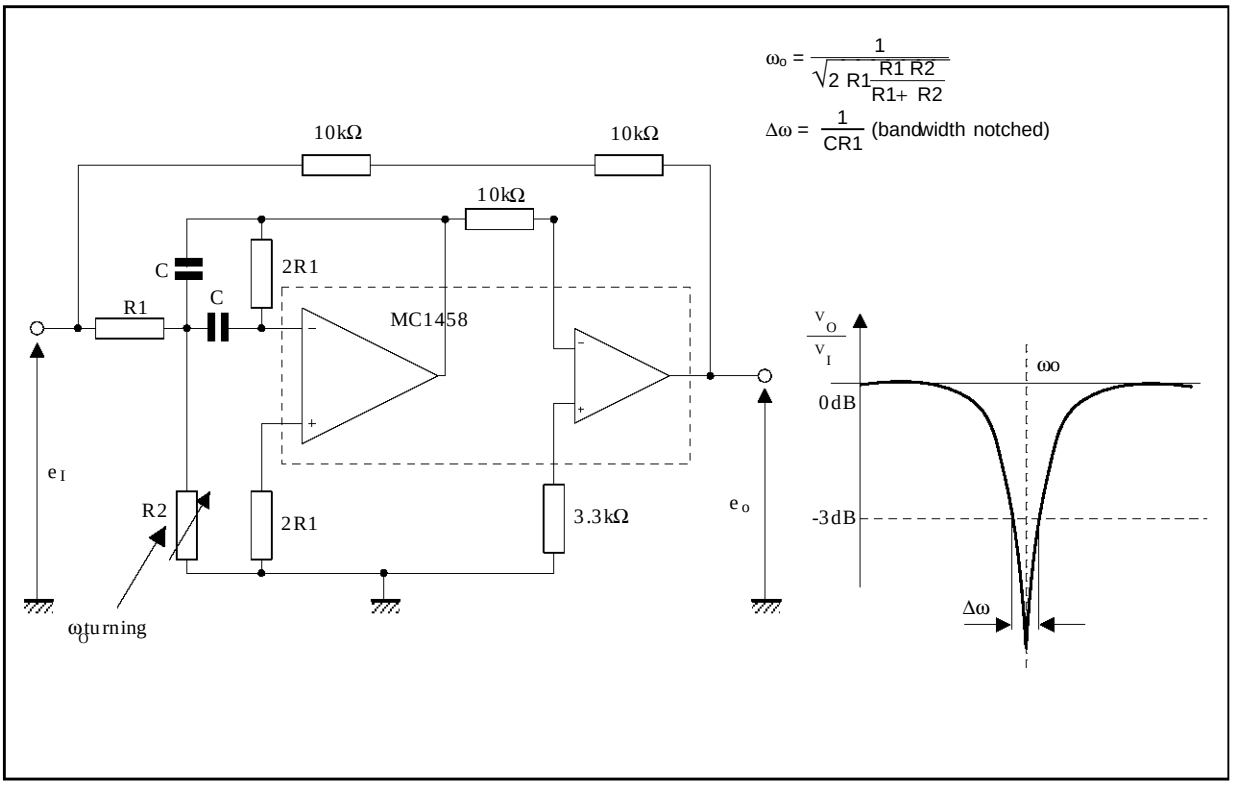

PACKAGE MECHANICAL DATA
8 PINS - PLASTIC DIP

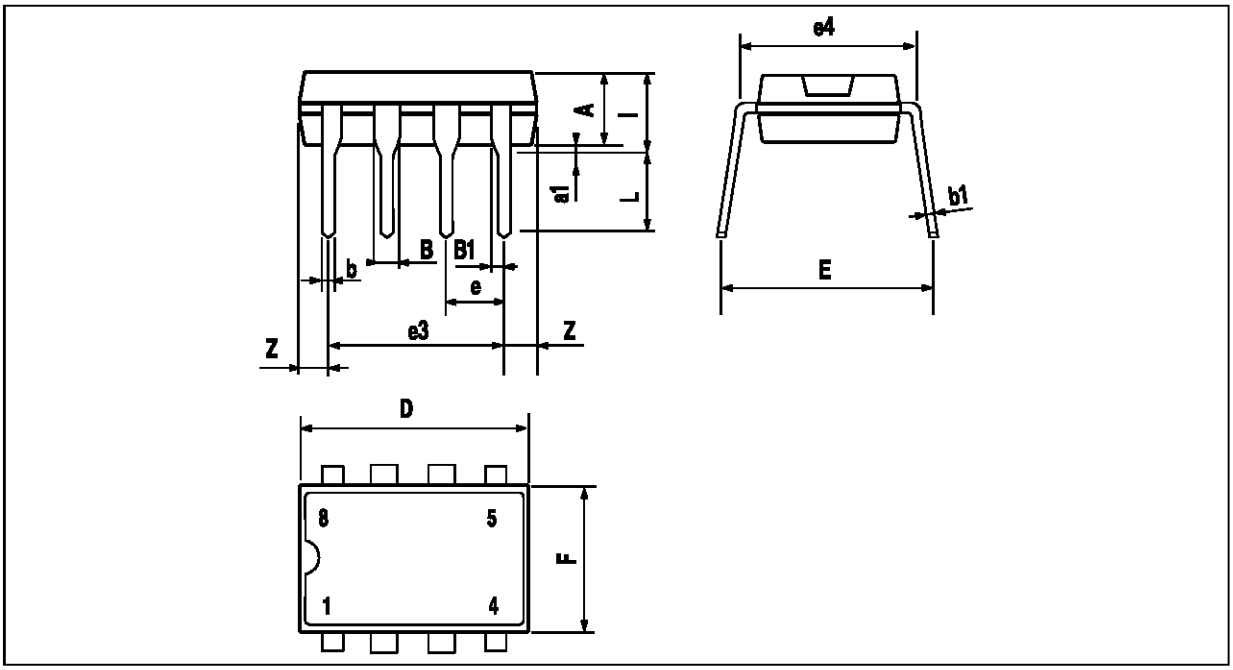

Dimensions	Millimeters			Inches		
	Min.	Typ.	Max.	Min.	Typ.	Max.
A		3.32			0.131	
a1	0.51			0.020		
B	1.15		1.65	0.045		0.065
b	0.356		0.55	0.014		0.022
b1	0.204		0.304	0.008		0.012
D			10.92			0.430
E	7.95		9.75	0.313		0.384
e		2.54			0.100	
e3		7.62			0.300	
e4		7.62			0.300	
F			6.6			0260
i			5.08			0.200
L	3.18		3.81	0.125		0.150
Z			1.52			0.060

DIP8.TBL

PACKAGE MECHANICAL DATA
8 PINS - PLASTIC MICROPACKAGE (SO)

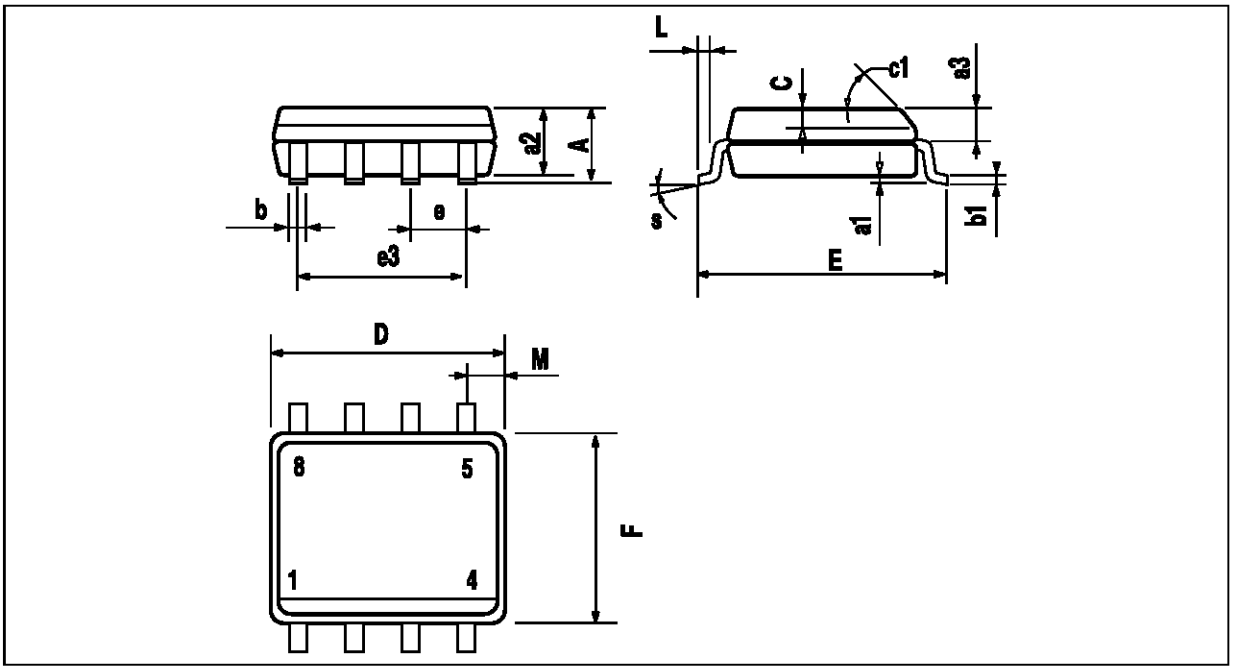

PM-SO8.EPS

Dimensions	Millimeters			Inches		
	Min.	Typ.	Max.	Min.	Typ.	Max.
A			1.75			0.069
a1	0.1		0.25	0.004		0.010
a2			1.65			0.065
a3	0.65		0.85	0.026		0.033
b	0.35		0.48	0.014		0.019
b1	0.19		0.25	0.007		0.010
C	0.25		0.5	0.010		0.020
c1	45° (typ.)					
D	4.8		5.0	0.189		0.197
E	5.8		6.2	0.228		0.244
e		1.27			0.050	
e3		3.81			0.150	
F	3.8		4.0	0.150		0.157
L	0.4		1.27	0.016		0.050
M			0.6			0.024
S	8° (max.)					

SO8.TBL

Information furnished is believed to be accurate and reliable. However, SGS-THOMSON Microelectronics assumes no responsibility for the consequences of use of such information nor for any infringement of patents or other rights of third parties which may result from its use. No license is granted by implication or otherwise under any patent or patent rights of SGS-THOMSON Microelectronics. Specifications mentioned in this publication are subject to change without notice. This publication supersedes and replaces all information previously supplied. SGS-THOMSON Microelectronics products are not authorized for use as critical components in life support devices or systems without express written approval of SGS-THOMSON Microelectronics.

© 1997 SGS-THOMSON Microelectronics – Printed in Italy – All Rights Reserved

SGS-THOMSON Microelectronics GROUP OF COMPANIES
Australia - Brazil - Canada - China - France - Germany - Hong Kong - Italy - Japan - Korea - Malaysia - Malta - Morocco
The Netherlands - Singapore - Spain - Sweden - Switzerland - Taiwan - Thailand - United Kingdom - U.S.A.

ORDER CODE :