SD57060

RF POWER TRANSISTORS
The *LdmoST* FAMILY

ADVANCE DATA

N-CHANNEL ENHANCEMENT-MODE LATERAL MOSFETs

- EXCELLENT THERMAL STABILITY
- COMMON SOURCE CONFIGURATION
- P_{OUT} = 60 W WITH 13 dB gain @ 945 MHz
- BeO FREE PACKAGE

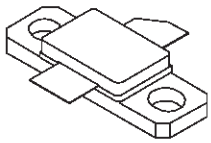

M243
epoxy sealed

ORDER CODE	BRANDING
SD57060	TSD57060

DESCRIPTION

The SD57060 is a common source N-Channel enhancement-mode lateral Field-Effect RF power transistor designed for broadband commercial and industrial applications at frequencies up to 1.0 GHz. The SD57060 is designed for high gain and broadband performance operating in common source mode at 28 V. It is ideal for base station applications requiring high linearity.

PIN CONNECTION

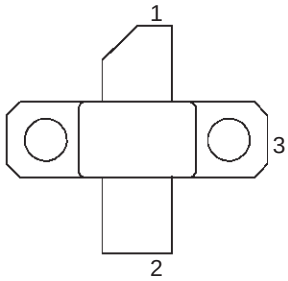

1. Drain
2. Gate
3. Source

ABSOLUTE MAXIMUM RATINGS (T_{CASE} = 25°C)

Symbol	Parameter	Value	Unit
$V_{(BR)DSS}$	Drain-Source Voltage	65	V
V_{GS}	Gate-Source Voltage	± 20	V
I_D	Drain Current	7	A
P_{DISS}	Power Dissipation (@ Tc = 70°C)	108	W
Tj	Max. Operating Junction Temperature	200	°C
T_{STG}	Storage Temperature	-65 to +150	°C

THERMAL DATA

$R_{th(j-c)}$	Junction -Case Thermal Resistance	1.2	°C/W

ELECTRICAL SPECIFICATION (T_{CASE} = 25°C)

STATIC

Symbol	Test Conditions			Min.	Typ.	Max.	Unit
$V_{(BR)DSS}$	V_{GS} = 0 V	I_{DS} = 1 mA		65			V
I_{DSS}	V_{GS} = 0 V	V_{DS} = 28 V				1	µA
I_{GSS}	V_{GS} = 20 V	V_{DS} = 0 V				1	µA
$V_{GS(Q)}$	V_{DS} = 28 V	I_D = 100 mA		2.0		5.0	V
$V_{DS(ON)}$	V_{GS} = 10 V	I_D = 3 A			0.7	0.8	V
G_{FS}	V_{DS} = 10 V	I_D = 3 A		2.5			mho
C_{ISS}*	V_{GS} = 0 V	V_{DS} = 28 V	f = 1 MHz		88		pF
C_{OSS}	V_{GS} = 0 V	V_{DS} = 28 V	f = 1 MHz		44		pF
C_{RSS}	V_{GS} = 0 V	V_{DS} = 28 V	f = 1 MHz		1.7		pF

Ref. 7143417B

DYNAMIC

Symbol	Test Conditions				Min.	Typ.	Max.	Unit
P_{OUT}	V_{DD} = 28 V	I_{DQ} = 100 mA		f = 945 MHz	60			W
G_{PS}	V_{DD} = 28 V	I_{DQ} = 100 mA	P_{OUT} = 60 W	f = 945 MHz	13	15		dB
η_D	V_{DD} = 28 V	I_{DQ} = 100 mA	P_{OUT} = 60 W	f = 945 MHz	53	60		%
Load mismatch	V_{DD} = 28 V ALL PHASE ANGLES	I_{DQ} = 100 mA	P_{OUT} = 60 W	f = 945 MHz	5:1			VSWR

IMPEDANCE DATA

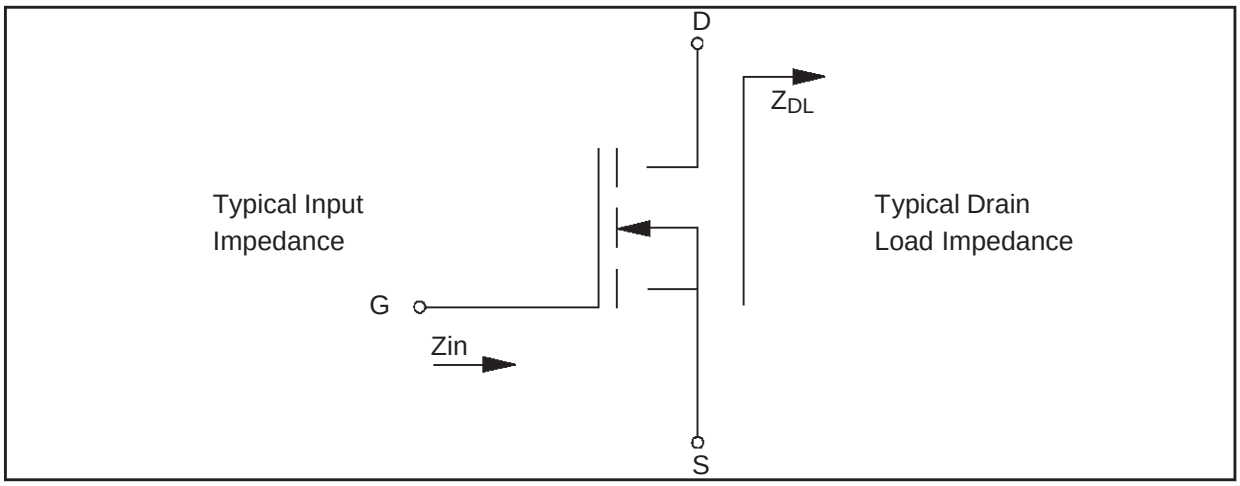

FREQ.	Z_{IN} (Ω)	Z_{DL}(Ω)
925 MHz	0.8 - j 0.095	1.5 + j 0.48
945 MHz	0.7 - j 0.05	1.6 + j 0.25
960 MHz	0.7 + j 0.1	1.7 + j 0.130

TYPICAL PERFORMANCE

Output Power and Power Gain vs. Input Power

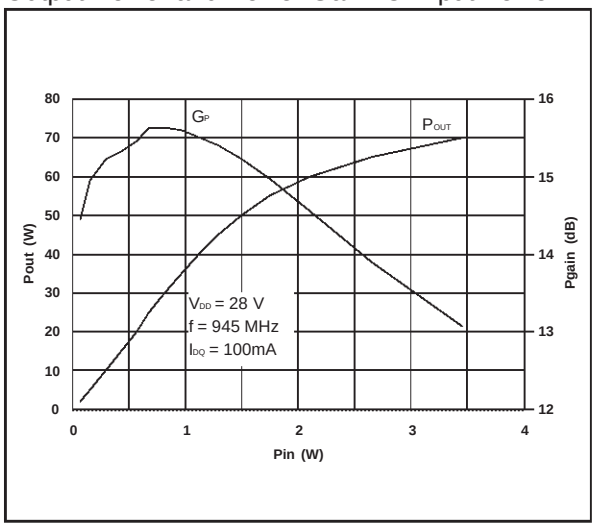

Output Power and Power Gain vs. Input Power

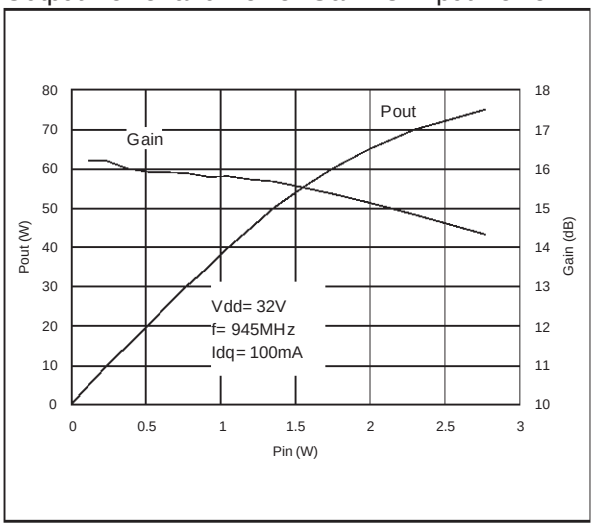

Efficiency vs. Output Power

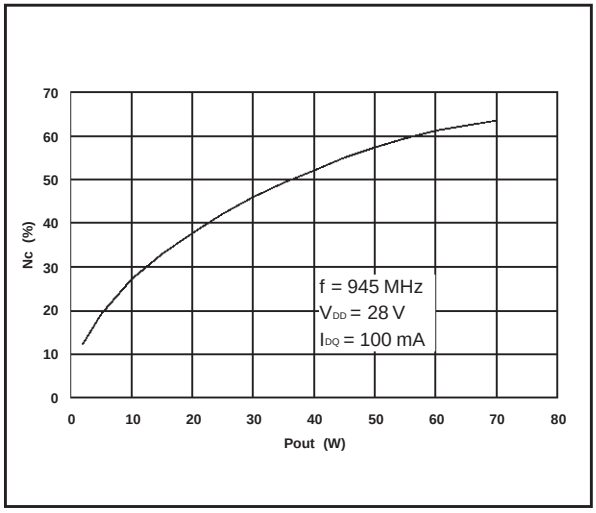

Efficiency vs. Output Power

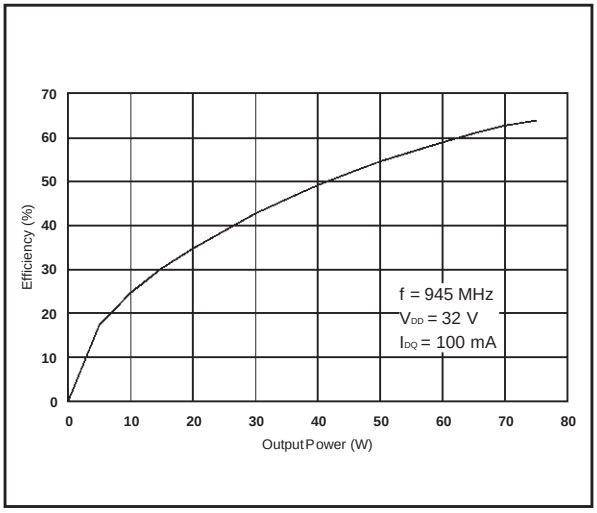

Output Power vs. Drain-Source Voltage

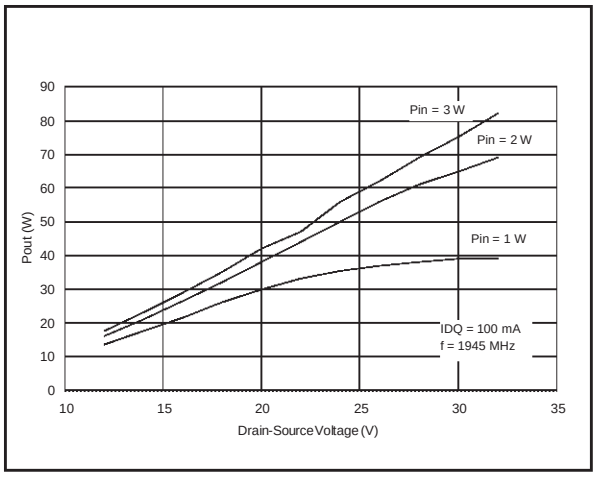

Intermodulation Distortion vs. Output Power

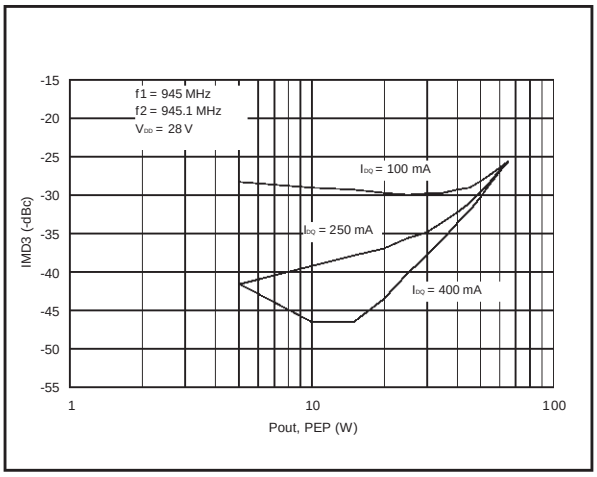

TYPICAL PERFORMANCE

Power Gain vs. Output Power

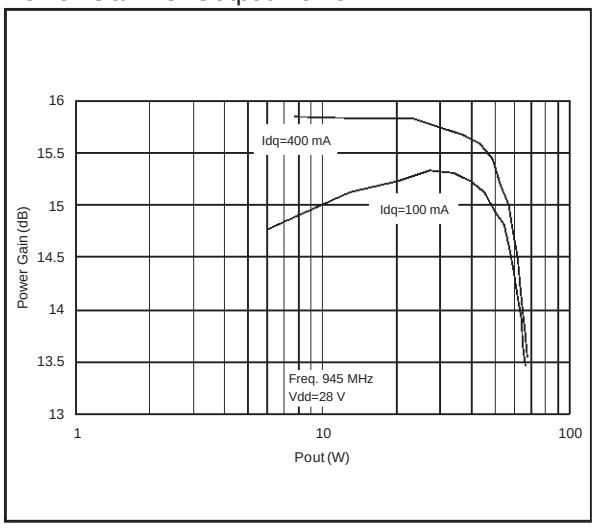

Safe Operating Area

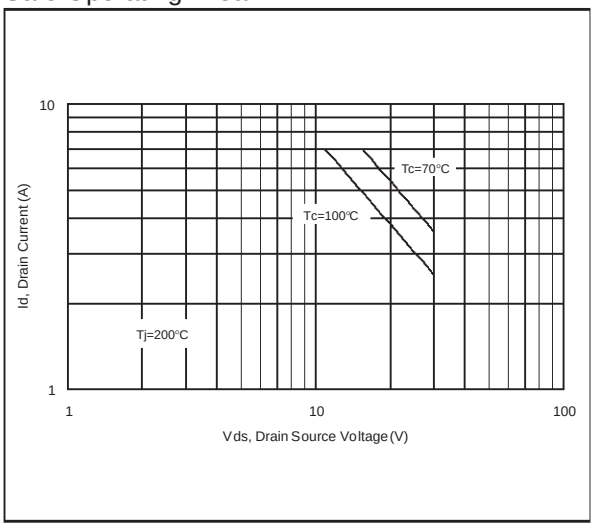

Capacitance vs. Drain-Source Voltage

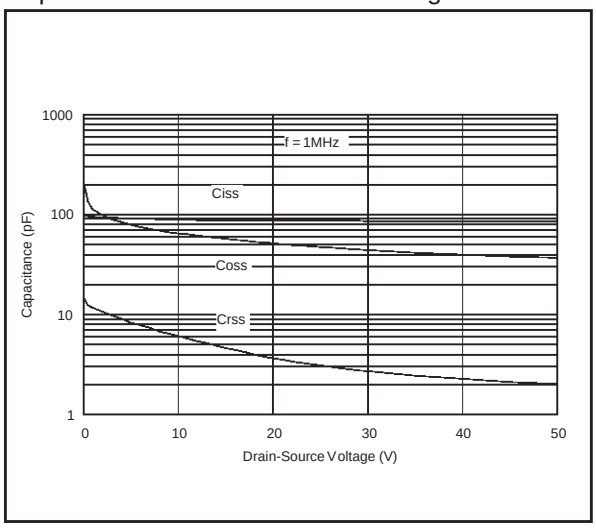

COMMON SOURCE S-PARAMETERS
(V_{DS} = 13.5 V, I_{DS} = 2 A)

FREQ(MHz)	s11 MAG	s11 ang	s21 MAG	s21 ang	s12 MAG	s12 ang	s22 MAG	s22 ang
50	0.896	-168.86	15.679	85.012	0.0116	-5.1128	0.796	-170.27
60	0.896	-169.3	14.859	84.592	0.0116	-5.4369	0.796	-170.49
70	0.869	-169.76	14.004	84.14	0.0116	-5.7912	0.797	-170.7
80	0.869	-170.23	13.122	83.644	0.0115	-60658	0.797	-170.9
90	0.897	-170.71	12.213	83.074	0.0115	-6.3789	0.798	-171.1
100	0.897	-171.19	11.285	82.404	0.0114	-6.8198	0.799	-171.29
150	0.9	-173.39	6.9575	76.841	0.0111	-9.6817	0.808	-171.96
200	0.905	-174.29	4.751	71.951	0.0103	-11.87	0.821	-171.79
250	0.912	-174.64	3.637	68.471	0.0097	-12.957	0.836	-171.36
300	0.92	.-174.9	2.889	64.839	0.0089	-13.493	0.851	-171.03
350	0.927	-175.08	2.428	62.538	0.0083	-11.937	0.866	-170.76
400	0.934	-175.3	2.077	58.748	0.0077	-11.228	0.881	-170.6
450	0.941	-175.5	1.802	56.081	0.0071	-8.7753	0.894	-170.49
500	0.947	-175.73	1.592	51.84	0.0066	-7.5009	0.907	-170.47
550	0.952	-176.02	1.379	48.632	0.0059	-4.8834	0.917	-170.55
600	0.956	-176.29	1.221	45.777	0.0053	0.12909	0.927	-170.67
650	0.96	-176.6	1.049	42.778	0.0048	5.0249	0.936	-170.82
700	0.962	-176.9	0.924	42.212	0.0043	13.591	0.943	-170.94
750	0.965	-177.22	0.814	40.376	0.0039	22.729	0.95	-171.05
800	0.968	177.51	0.723	41.348	0.0036	37.954	0.956	-171.14
850	0.97	-177.83	0.662	40.788	0.0037	51.305	0.961	-171.16
900	0.972	-178.19	0.6	41.719	0.0041	63.188	0.966	-171.24
950	0.974	-178.56	0.566	41.469	0.0047	73.463	0.971	-171.24
1000	0.975	-178.96	0.523	41.747	0.0055	80.707	0.974	-171.25
1050	0.976	-179.28	0.504	41.439	0.0064	88.27	0.977	-171.26
1100	0.978	-179.62	0.477	40.692	0.0074	92.504	0.979	-171.36
1150	0.979	-179.85	0.466	39.239	0.0084	96.743	0.981	-171.43
1200	0.981	179.9	0.444	36.775	0.0097	98.282	0.982	171.5
1250	0.982	179.68	0.431	34.788	0.011	99.121	0.983	-171.58
1300	0.983	179.52	0.408	31.862	0.0125	98.773	0.983	-171.71
1350	0.984	179.35	0.395	30.219	0.0136	97.973	0.983	-171.86
1400	0.985	179.24	0.382	26.465	0.0148	97.464	0.984	-171.94
1450	0.987	179.13	0.365	23.869	0.0157	95.39	0.984	-171.98
1500	0.988	179.09	0.351	21.267	0.0165	93.871	0.985	-171.98

COMMON SOURCE S-PARAMETERS
(V_{DS} = 28 V, I_{DS} = 2A)

FREQ(MHz)	s11 MAG	s11 ang	s21 MAG	s21 ang	s12 MAG	s12 ang	s22 MAG	s22 ang
50	0.857	-159.69	22.757	85.934	0.0114	-3.8342	0.67	-161.72
60	0.86	-160.69	21.547	85.328	0.0113	-4.4852	0.672	-162.07
70	0.862	-161.73	20.287	84.672	0.0112	-5.1512	0.674	-162.41
80	0.865	-162.8	18.987	83.933	0.0111	-5.8379	0.677	-162.74
90	0.869	-163.89	17.65	83.083	0.011	-6.5533	0.679	-163.07
100	0.872	-164.98	16.286	82.083	0.011	-7.4226	0.683	-163.39
150	0.891	-169.66	9.9447	74.03	0.0103	-12.13	0.708	-164.66
200	0.905	-171.43	6.719	67.256	0.0094	-15.548	0.74	-164.87
250	0.915	-172.29	5.074	62.268	0.0086	-17.236	0.774	-164.99
300	0.926	-172.84	3.978	57.533	0.0077	-18.625	0.806	-163.35
350	0.935	-173.34	3.297	54.035	0.0069	-17.313	0.834	-165.82
400	0.943	-173.79	2.775	49.488	0.0061	-16.81	0.86	-166.35
450	0.951	-174.24	2.376	46.121	0.0054	-13.006	0.881	-166.85
500	0.957	-174.67	2.061	41.541	0.0048	-9.175	0.898	-167.35
550	0.962	-175.11	1.766	38.23	0.0041	-2.5323	0.913	-167.83
600	0.966	-175.53	1.546	35.173	0.0035	-7.641	0.925	-168.25
650	0.969	-175.95	1.32	32.548	0.0031	19.501	0.937	-168.57
700	0.972	-176.34	1.162	31.674	0.0031	34.423	0.946	-168.81
750	0.974	-176.75	1.021	29.983	0.0032	48.345	0.954	-168.93
800	0.976	-177.15	0.91	30.341	0.0035	62.927	0.96	-168.98
850	0.977	-177.57	0.826	29.318	0.004	74.982	0.967	-168.95
900	0.978	-177.98	0.749	29.508	0.0047	81.962	0.973	-168.88
950	0.979	-178.41	0.696	28.477	0.0054	87.332	0.978	-168.77
1000	0.979	-178.85	0.639	27.949	0.0063	90.913	0.982	-168.72
1050	0.98	-179.24	0.601	26.768	0.0072	95.707	0.984	-168.75
1100	0.981	-179.61	0.561	25.598	0.0082	98.95	0.985	-168.87
1150	0.981	-179.95	0.533	23.746	0.0094	101.25	0.986	-169.13
1200	0.982	179.72	0.498	21.331	0.011	102.03	0.985	-169.64
1250	0.983	179.44	0.472	19.005	0.012	102.21	0.981	-170.42
1300	0.984	179.23	0.44	16.272	0.0131	101.78	0.976	-171.5
1350	0.985	179.02	0.417	14.424	0.0143	100.61	0.969	-172.89
1400	0.986	178.85	0.394	11.161	0.0156	99.505	0.96	-174.72
1450	0.986	178.7	0.372	8.789	0.0163	97.699	0.949	-176.87
1500	0.986	178.6	0.354	6.5533	0.0168	96.68	0.94	-178.58

Test Circuit Schematic

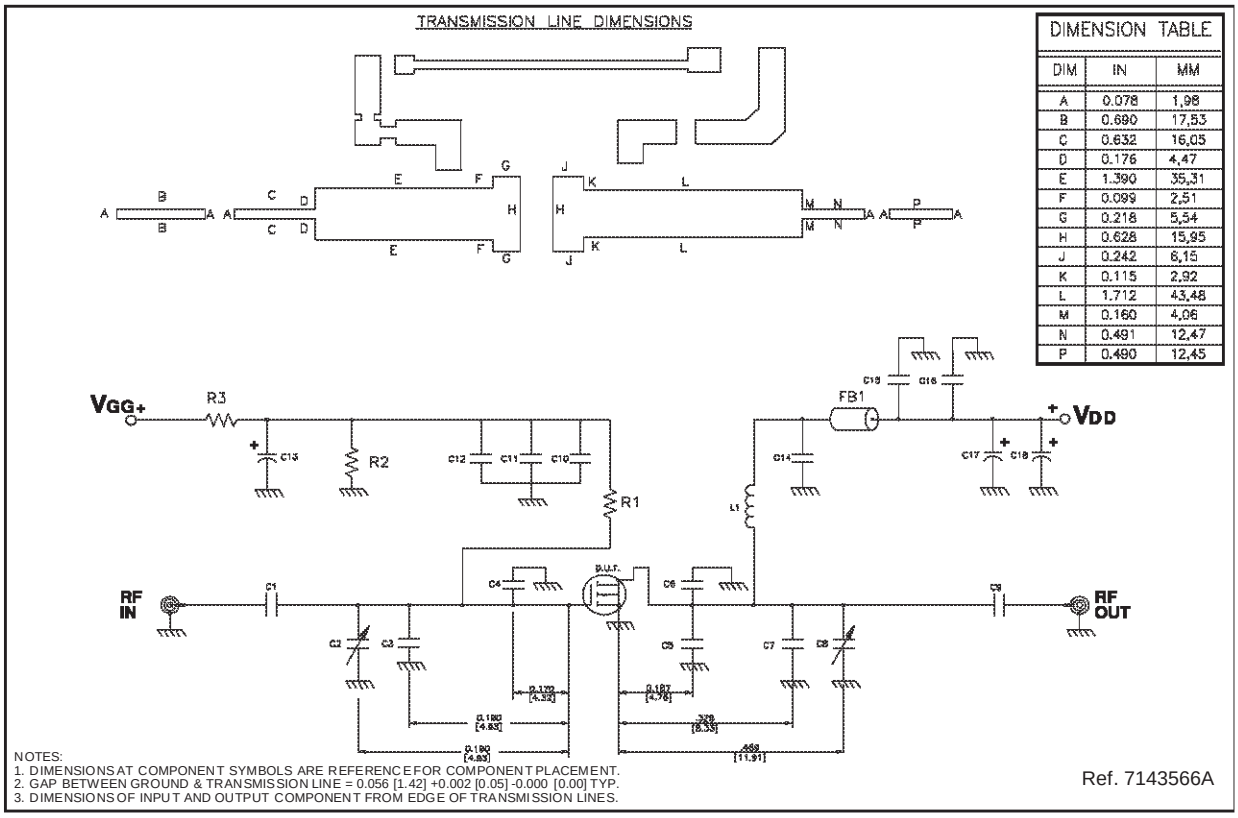

Test Circuit Component Part List

L1	INDUCTOR, 5 TURNS AIR WOUND #18 AWG, ID = 0.125 [3.18] NYLON COATED MAGNET WIRE	C6	7.5 pF ATC 100B SURFACE MOUNT CERAMIC CHIP CAPACITOR
FB1	SHIELD BEAD SURFACE MOUNT EMI	C7	8.2 pF ATC 100B SURFACE MOUNT CERAMIC CHIP CAPACITOR
R1	1 K Ohm, SURFACE MOUNT CHIP RESISTOR	C9	100 pF ATC 100B SURFACE MOUNT CERAMIC CHIP CAPACITOR
R2	18 K Ohm, SURFACE MOUNT CHIP RESISTOR	C10,C14	47 pF ATC 100B SURFACE MOUNT CERAMIC CHIP CAPACITOR
R3	10 K Ohm, SURFACE MOUNT CHIP RESISTOR	C11,C15	10000 pF ATC 100B SURFACE MOUNT CERAMIC CHIP CAPACITOR
C1	36 pF ATC 100B SURFACE MOUNT CERAMIC CHIP CAPACITOR	C12,C16	0.1 µF / 500 V SURFACE MOUNT CERAMIC CHIP CAPACITOR
C2,C8	0.8-8.0 pF GIGA TRIM VARIABLE CAPACITOR	C13,C17	10 µF / 50 V ALUMINIUM ELECTROLITIC RADIAL LEAD CAPACITOR
C3	4.7 pF ATC 100B SURFACE MOUNT CERAMIC CHIP CAPACITOR	C18	220 µF / 63 V V ALUMINIUM ELECTROLITIC RADIAL LEAD CAPACITOR
C4	11 pF ATC 100B SURFACE MOUNT CERAMIC CHIP CAPACITOR	PCB	ULTRALAM 2000, WOVEN FIBERGLASS REINFORCED PTFE. 0.030” THK, εr= 2.55, 2 OZ ED CU BOTH SIDES
C5	1.3 pF ATC 100B SURFACE MOUNT CERAMIC CHIP CAPACITOR		

Test Fixture

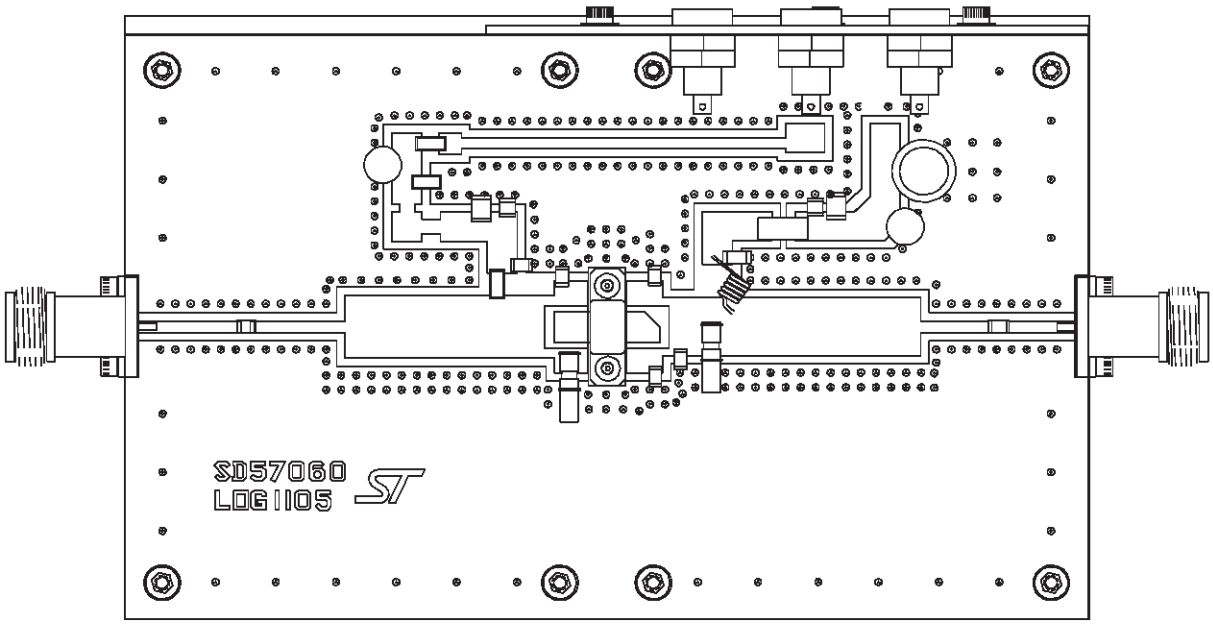

Ref. 7143566A

Test Circuit Photomaster

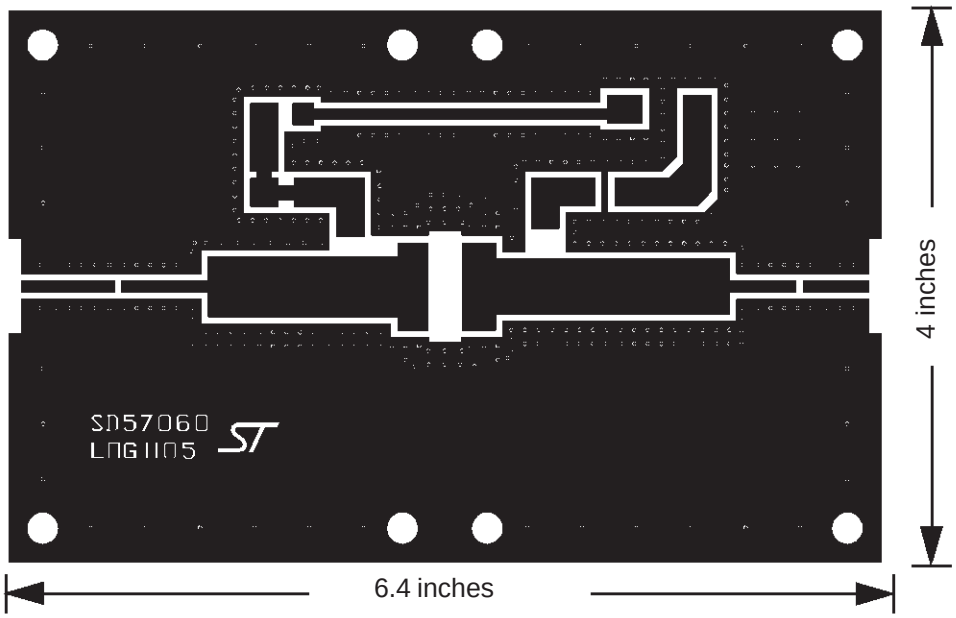

Ref. 7143566A

M243 (.230 x .360 2L N/HERM W/FLG) MECHANICAL DATA

DIM.	mm			Inch		
	MIN.	TYP.	MAX	MIN.	TYP.	MAX
A	5.21		5.72	0.205		0.225
B	5.46		6.48	0.215		0.255
C	5.59		6.10	0.220		0.240
D		14.27			0.562	
E	20.07		20.57	0.790		0.810
F	8.89		9.40	0.350		0.370
G	0.10		0.15	0.004		0.006
H	3.18		4.45	0.125		0.175
I	1.83		2.24	0.072		0.088
J	1.27		1.78	0.050		0.070

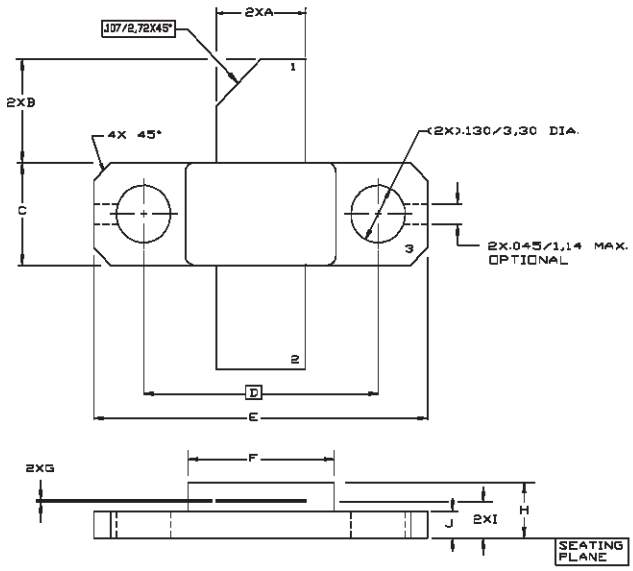

Controlling dimension: Inches

1022142E

Information furnished is believed to be accurate and reliable. However, STMicroelectronics assumes no responsibility for the consequences of use of such information nor for any infringement of patents or other rights of third parties which may result from its use. No license is granted by implication or otherwise under any patent or patent rights of STMicroelectronics. Specifications mentioned in this publication are subject to change without notice. This publication supersedes and replaces all information previously supplied. STMicroelectronics products are not authorized for use as critical components in life support devices or systems without express written approval of STMicroelectronics.

The ST logo is registered trademark of STMicroelectronics
® 2000 STMicroelectronics - All Rights Reserved

All other names are the property of their respective owners.

STMicroelectronics GROUP OF COMPANIES
Australia - Brazil - China - Finland - France - Germany - Hong Kong - India - Italy - Japan - Malaysia - Malta - Morocco - Singapore - Spain - Sweden - Switzerland - United Kingdom - U.S.A.

http://www.st.com