SHINDENGEN

General Purpose Rectifiers

Square In-line Package

S15VB20

200V 15A

OUTLINE DIMENSIONS

Case : S15VB

Unit : mm

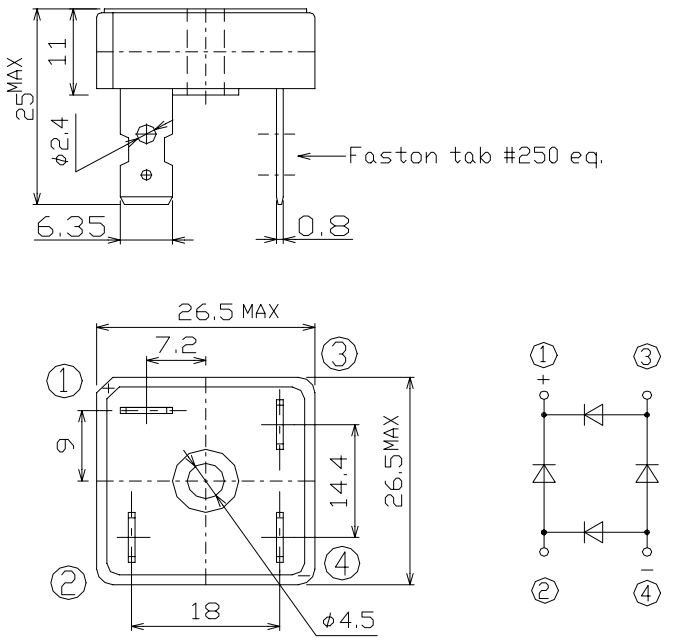

RATINGS

● Absolute Maximum Ratings

Item	Symbol	Conditions	Ratings	Unit
Storage Temperature	Tstg		−40～150	℃
Operating Junction Temperature	Tj		150	℃
Maximum Reverse Voltage	V_{RM}		200	V
Average Rectified Forward Current	I_O	50Hz sine wave, R-load With heatsink, Tc=83℃	15	A
		50Hz sine wave, R-load Without heatsink, Ta=40℃	4.5	
Peak Surge Forward Current	I_{FSM}	50Hz sine wave, Non-repetitive 1cycle peak value, Tj=25℃	200	A
Current Squared Time	I^2t	2ms≦t＜10ms Tj=25℃	200	A^2s
Dielectric Strength	Vdis	Terminals to case, AC 1 minute	2	kV
Mounting Torque	TOR	(Recommended torque : 1N･m)	2	N･m

● Electrical Characteristics (Tc=25℃)

Item	Symbol	Conditions	Ratings	Unit
Forward Voltage	V_F	I_F=7.5A, Pulse measurement, Rating of per diode	Max.1.05	V
Reverse Current	I_R	V_R=V_{RM}, Pulse measurement, Rating of per diode	Max.10	μA
Thermal Resistance	θjc	junction to case	Max.2.3	℃/W

Copyright & Copy;2002 Shindengen Electric Mfg.Co.,Ltd.

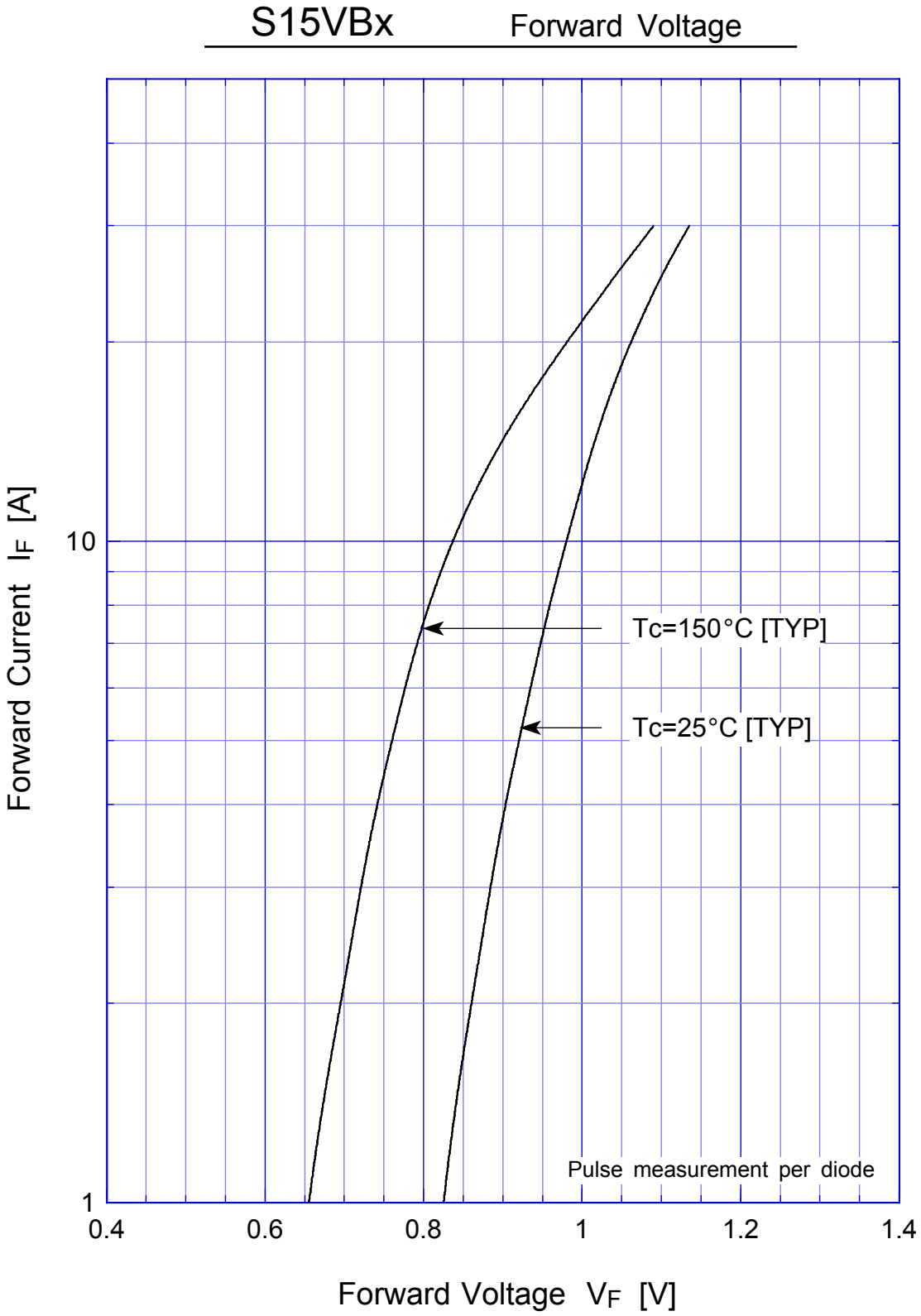
S15VBx
Forward Voltage
Forward Current IF [A]
10
1
0.4
0.6
0.8
1
1.2
1.4
Tc=150°C [TYP]
Tc=25°C [TYP]
Pulse measurement per diode
Forward Voltage VF [V]

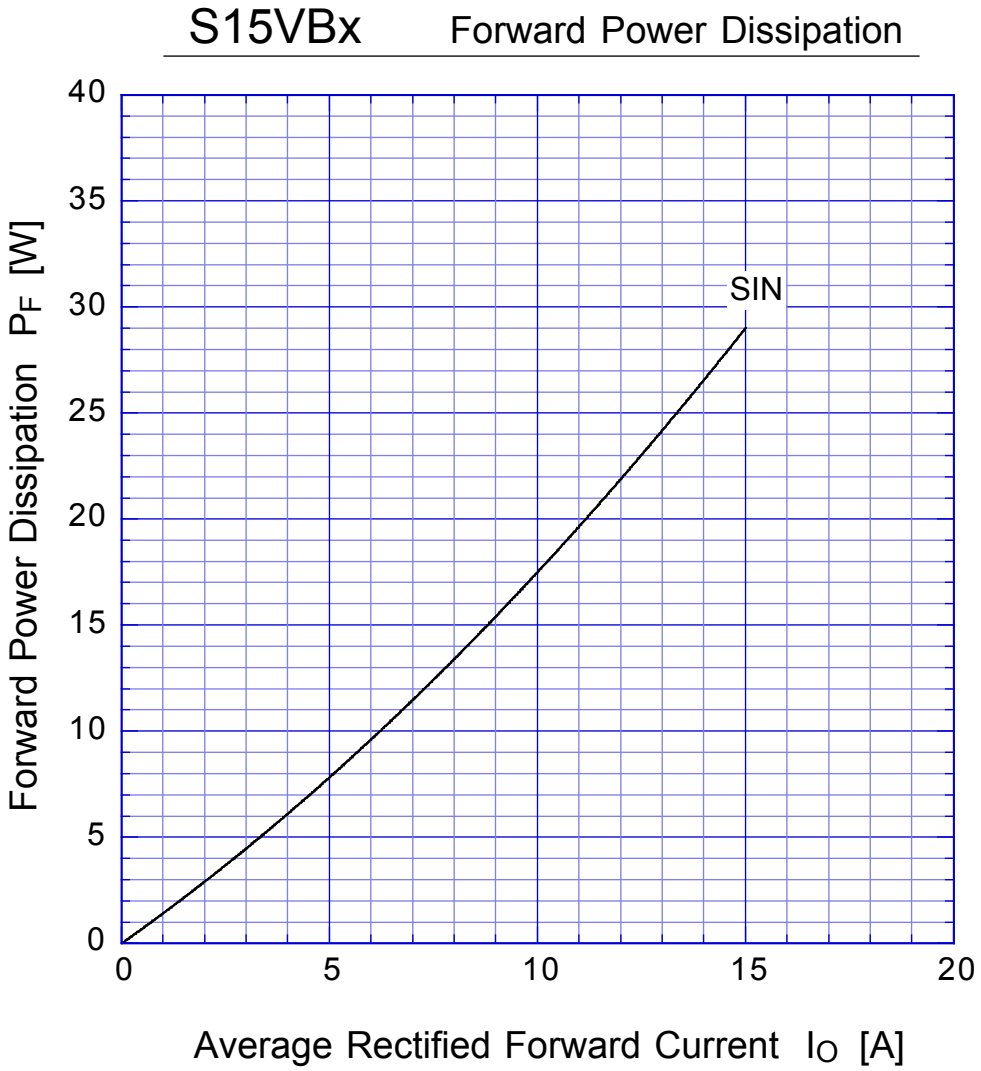

Tj = 150°C
Sine wave

S15VBx Derating Curve

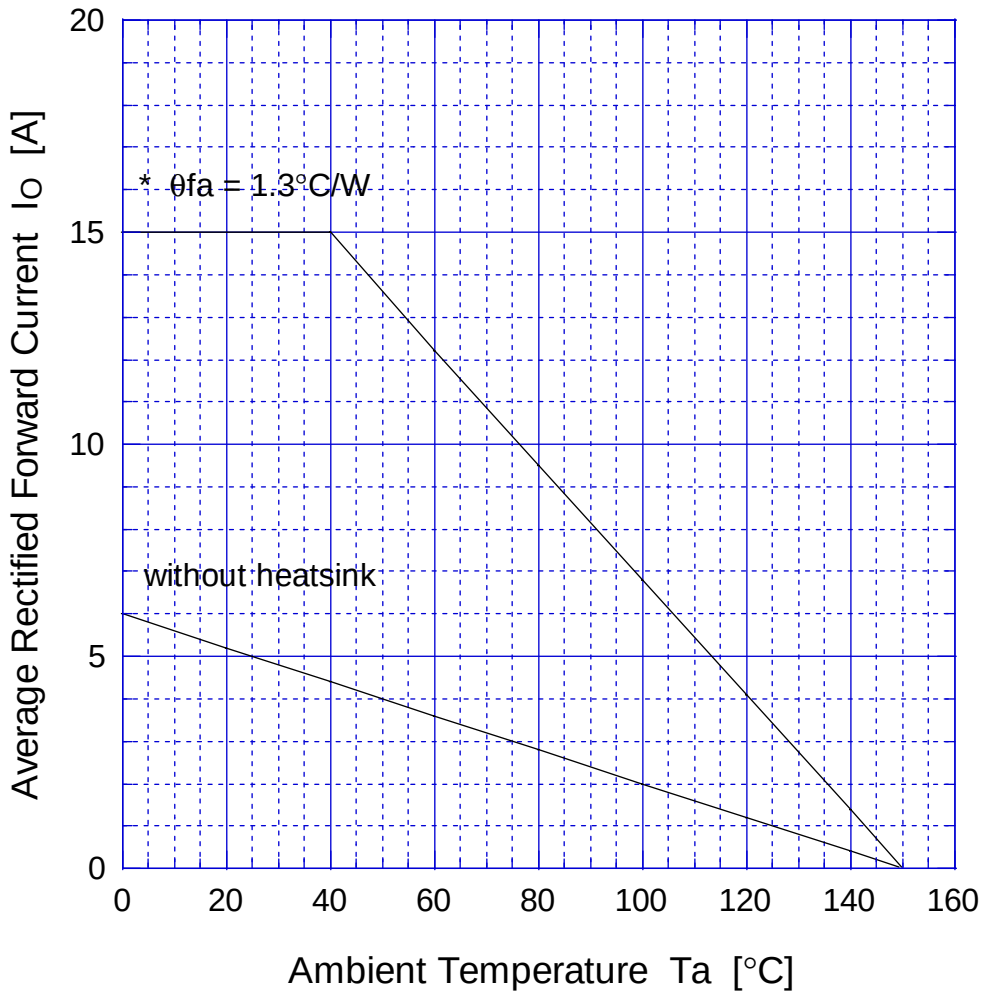

Sine wave
R-load
Free in air
* with thermal compound, TOR=0.5N-m

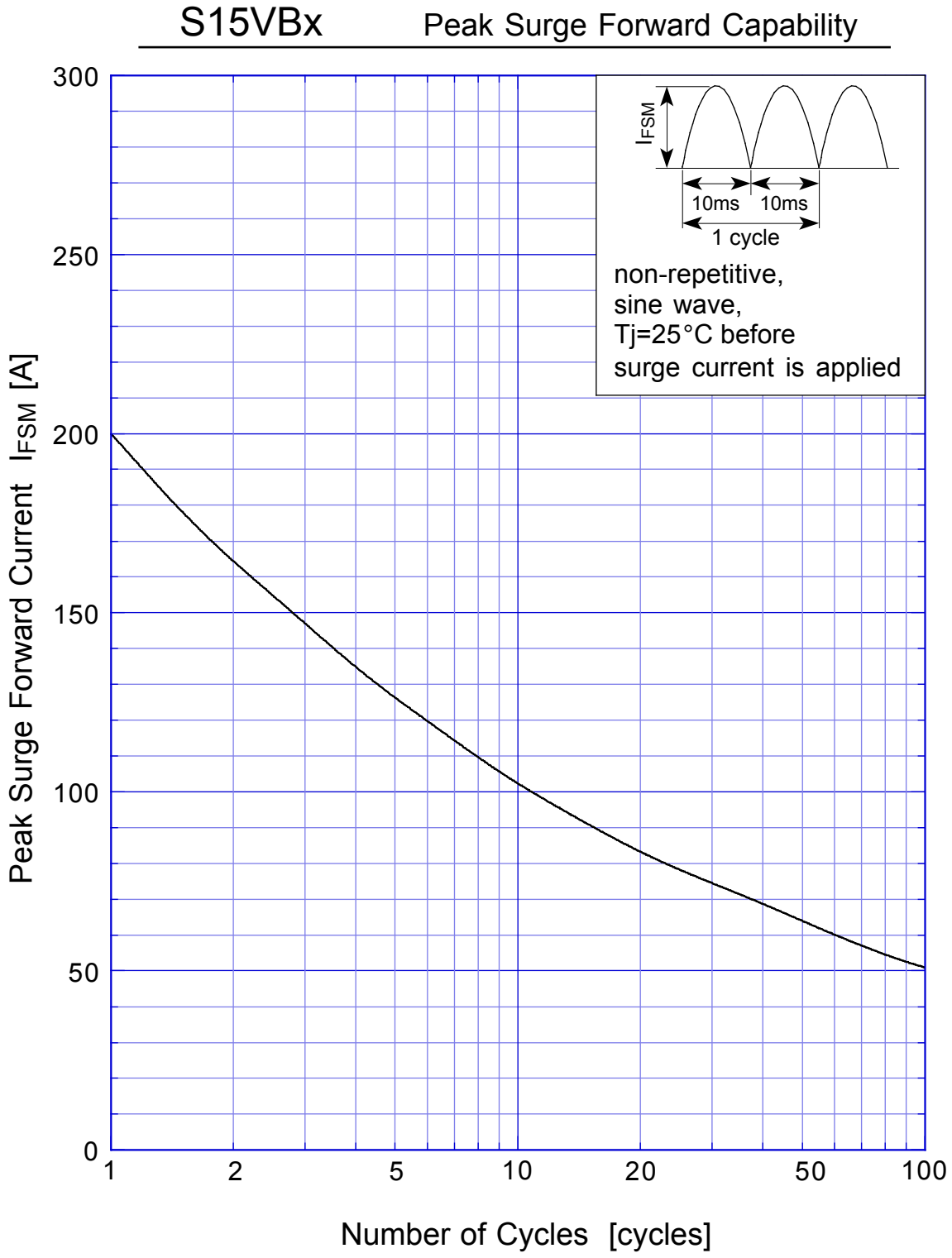
S15VBx
Peak Surge Forward Capability
Peak Surge Forward Current IFSM [A]
300
250
200
150
100
50
0
1
2
5
10
20
50
100
Number of Cycles [cycles]
IFSM
10ms
10ms
1 cycle
non-repetitive,
sine wave,
Tj=25°C before
surge current is applied