STK459

POWER AMPLIFIER
2X15W

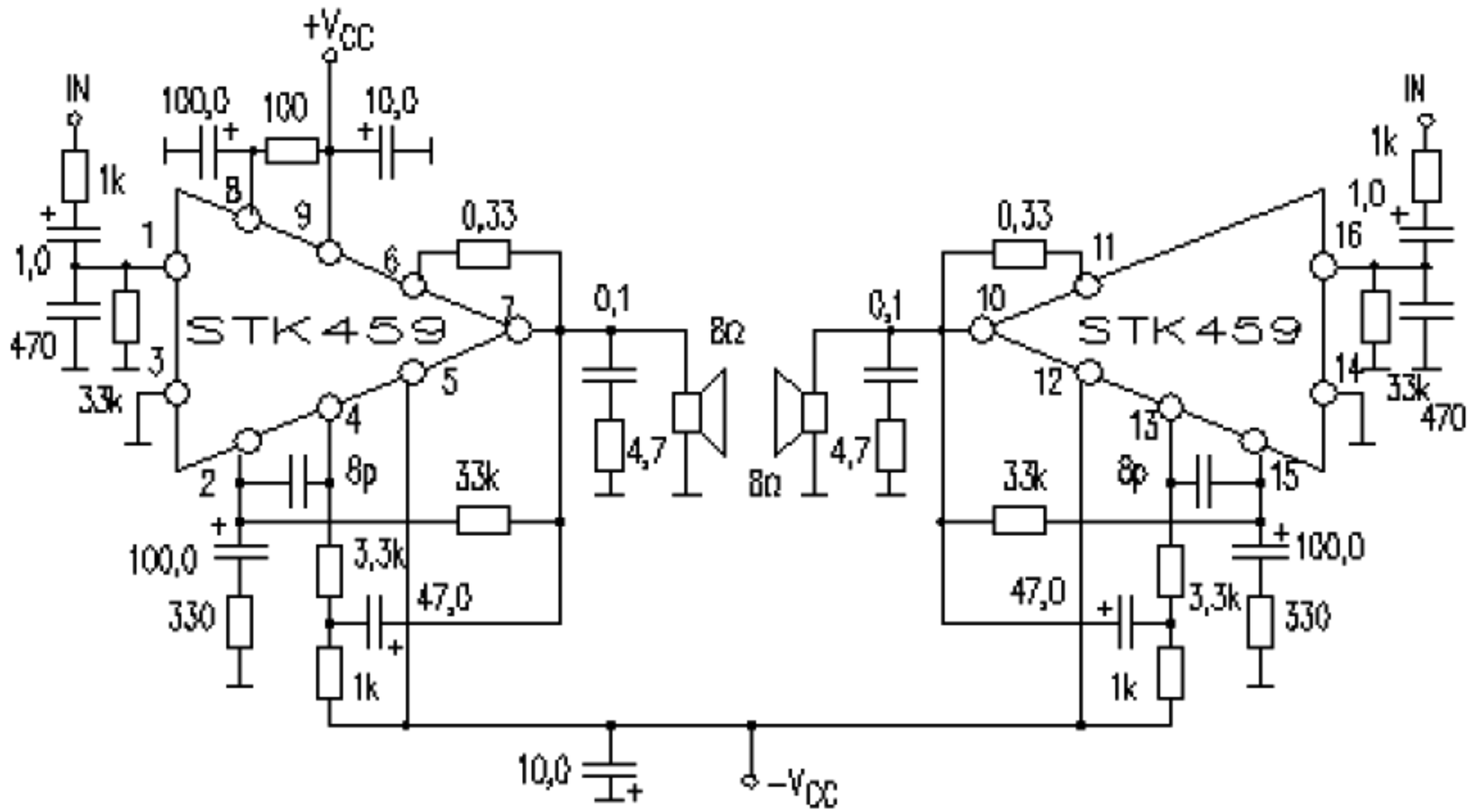

$V_{CC\ MAX}$ = ± 31V		
$V_{CC\ TYP}$ = ± 21V	± 19V	
$V_{CC\ RNG}$ = –		
P_O = 2x15W	2x20W	
R_L = 8 Ohm	4 Ohm	
THD = 0,08%	0,2%	
$I_{CCO\ TYP}$ = 40mA		
$I_{CCO\ MAX}$ = 120mA		
I_{MAX} = –		
R_{IN} = 32k		
Gain = 40dB		
Noise = 1,2mV		
R_{THJ-C} = –		
Case H15		