1 Digit 14.4 mm (.6”) Series

Conventional Part No.	Global Prat No.	Lighting Color
LN516YA	LNM416AA01	Amber
LN516YK	LNM416KA01	Amber
LN516OA	LNM816AA01	Orange
LN516OK	LNM816KA01	Orange

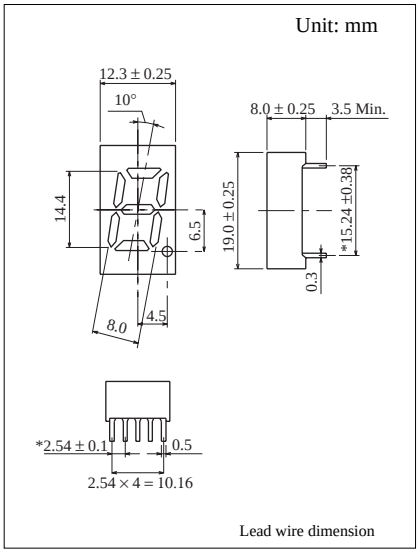

Terminal Connection

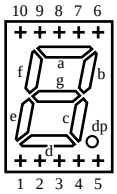

Pin No.	Assignment	Assignment
1	Cathode e	Anode e
2	Cathode d	Anode d
3	Common Anode	Common Cathode
4	Cathode c	Anode c
5	Cathode dp	Anode dp
6	Cathode b	Anode b
7	Cathode a	Anode a
8	Common Anode	Common Cathode
9	Cathode f	Anode f
10	Cathode g	Anode g

■ Absolute Maximum Ratings (T_a = 25°C)

Lighting Color	P_D(mW)	I_F(mA)	I_{FP}(mA)*	V_R(V)	T_{opr}(°C)	T_{stg}(°C)
Amber	60	20	100	5	–25 ~ +80	–30 ~ +85
Orange	60	20	100	3	–25 ~ +80	–30 ~ +85

★I_{FP}の条件は, duty 10%, Pulse width 1 msec. The condition of I_{FP} is duty 10%, Pulse width 1 msec

■ Electro–Optical Characteristics (T_a = 25°C)
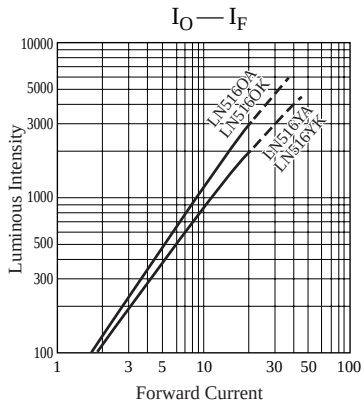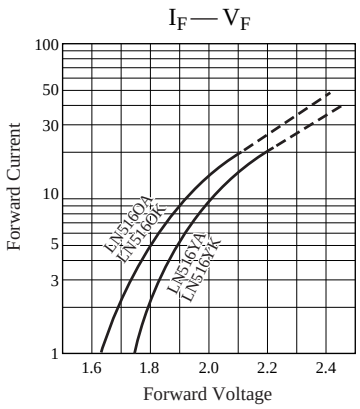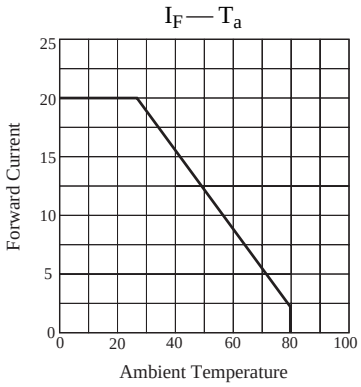
Conventional Part No.	Lighting Color	Common	I_O / seg		I_O /d.p		V_F		λ_P	$\Delta\lambda$		I_R	
			Typ	Min	Typ	I_F	Typ	Max	Typ	Typ	I_F	Max	V_R
LN516YA	Amber	Anode	800	300	300	10	2.2	2.8	590	30	20	10	5
LN516YK	Amber	Cathode	800	300	300	10	2.2	2.8	590	30	20	10	5
LN516OA	Orange	Anode	1200	300	500	10	2.1	2.8	630	40	20	10	3
LN516OK	Orange	Cathode	1200	300	500	10	2.1	2.8	630	40	20	10	3
Unit	—	—	µcd	µcd	µcd	mA	V	V	nm	nm	mA	µA	V