Certificate Number: Q10561 Certificate Number: E17276

AR2500L - AR2510L

AUTOMOTIVE RECTIFIER DIODES

PRV : 50 - 1000 Volts
Io : 25 Amperes

FEATURES :
* High current capability
* High surge current capability
* High reliability
* Low reverse current
* Low forward voltage drop

MECHANICAL DATA :
* Case : Molded plastic
* Epoxy : UL94V-O rate flame retardant
* Lead : Axial lead solderable per MIL-STD-202, Method 208 guaranteed
* Polarity : Cathode polarity band
* Mounting position : Any
* Weight : 2.73 grams

AR - L

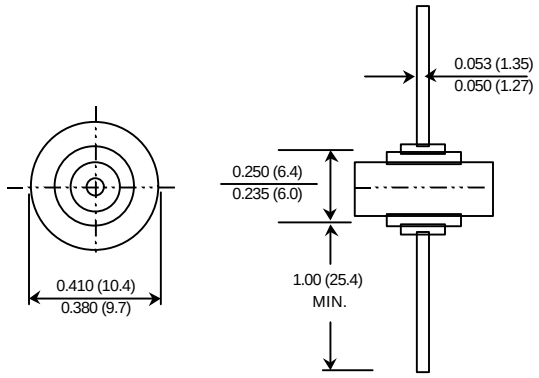

Dimensions in inches and (millimeter)

MAXIMUM RATINGS AND ELECTRICAL CHARACTERISTICS
Rating at 25 °C ambient temperature unless otherw ise specified.
Single phase, half w ave, 60 Hz, resistive or inductive load.
For capacitive load, derate current by 20%.

RATING	SYMBOL	AR 2500L	AR 2501L	AR 2502L	AR 2504L	AR 2506L	AR 2508L	AR 2510L	UNIT
Maximum Repetitive Peak Reverse Voltage	V_{RRM}	50	100	200	400	600	800	1000	Volts
Maximum RMS Voltage	V_{RMS}	35	70	140	280	420	560	700	Volts
Maximum DC Blocking Voltage	V_{DC}	50	100	200	400	600	800	1000	Volts
Average Rectified Forward Current Tc = 150°C	$I_{F(AV)}$	25							Amps.
Peak Forward Surge Current Single half sine wave superimposed on rated load (JEDEC Method)	I_{FSM}	400							Amps.
Maximum Forward Voltage at I_F = 25 Amps.	V_F	1.0							Volt.
Maximum DC Reverse Current Ta = 25 °C	I_R	5.0							µA
at rated DC Blocking Voltage Ta = 100 °C	$I_{R(H)}$	1.0							mA
Thermal Resistance (Note 1)	R_q JC	0.8							°C/W
Junction Temperature Range	T_J	- 65 to + 175							°C
Storage Temperature Range	T_{STG}	- 65 to + 175							°C

Note : (1) Thermal resistance from junction to case. Single side cooled.

UPDATE : NOVEMBER 23, 1998

RATING AND CHARACTERISTIC CURVES (AR2500L - AR2510L)

FIG.1 - DERATING CURVE FOR OUTPUT RECTIFIED CURRENT

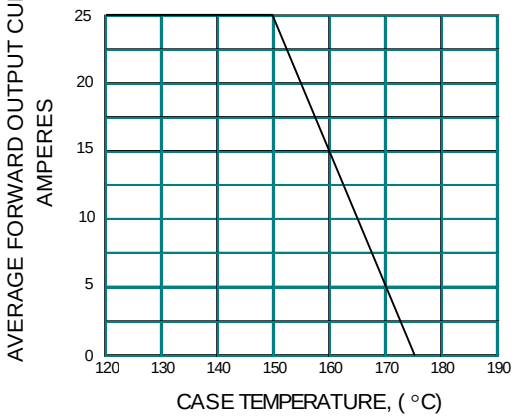

FIG.2 - MAXIMUM NON-REPETITIVE PEAK FORWARD SURGE CURRENT

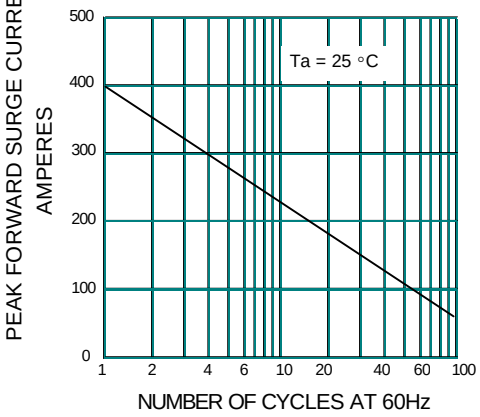

FIG.3 - TYPICAL FORWARD CHARACTERISTICS

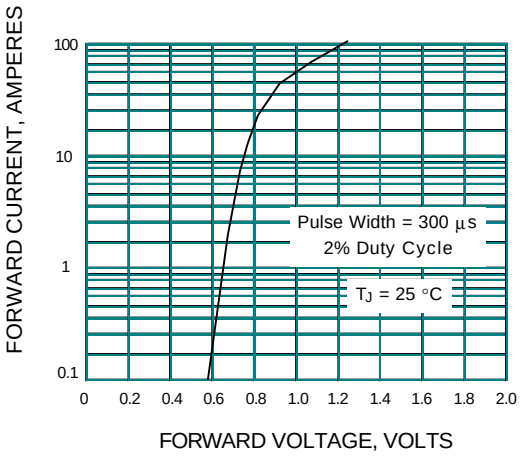
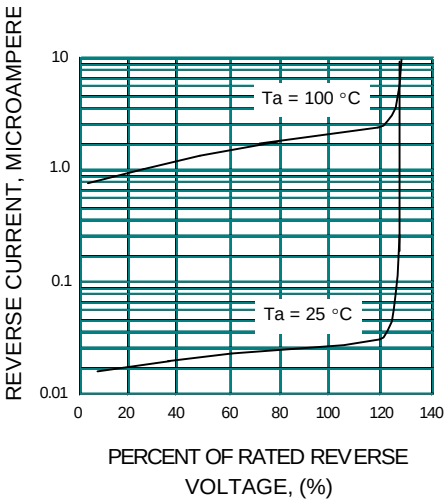
FIG.4 - TYPICAL REVERSE CHARACTERISTICS