PD - 94631

International
IOR Rectifier

SMPS MOSFET

IRFB16N60L

HEXFET® Power MOSFET

V_{DSS}	$R_{DS(on)}$ typ.	Trr typ.	I_D
600V	385mΩ	130ns	16A

Applications

- Zero Voltage Switching SMPS
- Telecom and Server Power Supplies
- Uninterruptible Power Supplies
- Motor Control applications

Features and Benefits

- SuperFast body diode eliminates the need for external diodes in ZVS applications.
- Lower Gate charge results in simpler drive requirements.
- Enhanced dv/dt capabilities offer improved ruggedness.
- Higher Gate voltage threshold offers improved noise immunity.

TO-220AB

Absolute Maximum Ratings

	Parameter	Max.	Units
I_D @ T_C = 25°C	Continuous Drain Current, V_{GS} @ 10V	16	A
I_D @ T_C = 100°C	Continuous Drain Current, V_{GS} @ 10V	10	
I_{DM}	Pulsed Drain Current ①	60	
P_D @T_C = 25°C	Power Dissipation	310	W
	Linear Derating Factor	2.5	W/°C
V_{GS}	Gate-to-Source Voltage	±30	V
dv/dt	Peak Diode Recovery dv/dt ②	10	V/ns
T_J T_{STG}	Operating Junction and Storage Temperature Range	-55 to + 150	°C
	Soldering Temperature, for 10 seconds	300 (1.6mm from case)	
	Mounting torque, 6-32 or M3 screw	1.1(10)	N•m (lbf•in)

Diode Characteristics

Symbol	Parameter	Min.	Typ.	Max.	Units	Conditions
I_S	Continuous Source Current (Body Diode)	——	——	16	A	MOSFET symbol showing the integral reverse p-n junction diode. 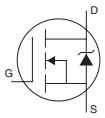
I_{SM}	Pulsed Source Current (Body Diode) ①	——	——	60		
V_{SD}	Diode Forward Voltage	——	——	1.5	V	T_J = 25°C, I_S = 16A, V_{GS} = 0V ④
t_{rr}	Reverse Recovery Time	——	130	200	ns	T_J = 25°C, I_F = 16A
		——	240	360		T_J = 125°C, di/dt = 100A/µs ④
Q_{rr}	Reverse Recovery Charge	——	450	670	nC	T_J = 25°C, I_S = 16A, V_{GS} = 0V ④
		——	1080	1620		T_J = 125°C, di/dt = 100A/µs ④
I_{RRM}	Reverse Recovery Current	——	5.8	8.7	A	T_J = 25°C
t_{on}	Forward Turn-On Time	Intrinsic turn-on time is negligible (turn-on is dominated by LS+LD)				

02/14/03

Static @ T_J = 25°C (unless otherwise specified)

Symbol	Parameter	Min.	Typ.	Max.	Units	Conditions
$V_{(BR)DSS}$	Drain-to-Source Breakdown Voltage	600	—	—	V	V_{GS} = 0V, I_D = 250μA
$\Delta V_{(BR)DSS}/\Delta T_J$	Breakdown Voltage Temp. Coefficient	—	0.39	—	V/°C	Reference to 25°C, I_D = 1mA
$R_{DS(on)}$	Static Drain-to-Source On-Resistance	—	385	460	mΩ	V_{GS} = 10V, I_D = 9.0A ④
$V_{GS(th)}$	Gate Threshold Voltage	3.0	—	5.0	V	V_{DS} = V_{GS}, I_D = 250μA
I_{DSS}	Drain-to-Source Leakage Current	—	—	50	μA	V_{DS} = 600V, V_{GS} = 0V
		—	—	2.0	mA	V_{DS} = 480V, V_{GS} = 0V, T_J = 125°C
I_{GSS}	Gate-to-Source Forward Leakage	—	—	100	nA	V_{GS} = 30V
	Gate-to-Source Reverse Leakage	—	—	-100		V_{GS} = -30V
R_G	Internal Gate Resistance	—	0.79	—	Ω	f = 1MHz, open drain

Dynamic @ T_J = 25°C (unless otherwise specified)

Symbol	Parameter	Min.	Typ.	Max.	Units	Conditions
gfs	Forward Transconductance	8.3	—	—	S	V_{DS} = 50V, I_D = 9.0A
Q_g	Total Gate Charge	—	—	100	nC	I_D = 16A
Q_{gs}	Gate-to-Source Charge	—	—	30		V_{DS} = 480V
Q_{gd}	Gate-to-Drain ("Miller") Charge	—	—	46		V_{GS} = 10V, See Fig. 7 & 15 ④
$t_{d(on)}$	Turn-On Delay Time	—	20	—	ns	V_{DD} = 300V
t_r	Rise Time	—	44	—		I_D = 16A
$t_{d(off)}$	Turn-Off Delay Time	—	28	—		R_G = 1.8Ω
t_f	Fall Time	—	5.5	—		V_{GS} = 10V, See Fig. 11a & 11b ④
C_{iss}	Input Capacitance	—	2720	—	pF	V_{GS} = 0V
C_{oss}	Output Capacitance	—	260	—		V_{DS} = 25V
C_{rss}	Reverse Transfer Capacitance	—	20	—		f = 1.0MHz, See Fig. 5
C_{oss} eff.	Effective Output Capacitance	—	120	—		V_{GS} = 0V,V_{DS} = 0V to 480V ⑤
C_{oss} eff. (ER)	Effective Output Capacitance (Energy Related)	—	100	—		

Avalanche Characteristics

Symbol	Parameter	Typ.	Max.	Units
E_{AS}	Single Pulse Avalanche Energy②	—	310	mJ
I_{AR}	Avalanche Current ①	—	16	A
E_{AR}	Repetitive Avalanche Energy ①	—	31	mJ

Thermal Resistance

Symbol	Parameter	Typ.	Max.	Units
$R_{\theta JC}$	Junction-to-Case	—	0.4	°C/W
$R_{\theta JA}$	Junction-to-Ambient	—	62	

Notes:

① Repetitive rating; pulse width limited by max. junction temperature. (See Fig. 11)

② Starting T_J = 25°C, L = 2.5mH, R_G = 25Ω, I_{AS} = 16A, dv/dt = 10V/ns. (See Figure 12a)

③ $I_{SD} \leq$ 16A, di/dt $\leq$ 340A/μs, $V_{DD} \leq V_{(BR)DSS}$, $T_J \leq$ 150°C.

④ Pulse width $\leq$ 300μs; duty cycle $\leq$ 2%.

⑤ C_{oss} eff. is a fixed capacitance that gives the same charging time as C_{oss} while V_{DS} is rising from 0 to 80% V_{DSS}.
C_{oss} eff.(ER) is a fixed capacitance that stores the same energy as C_{oss} while V_{DS} is rising from 0 to 80% V_{DSS}.

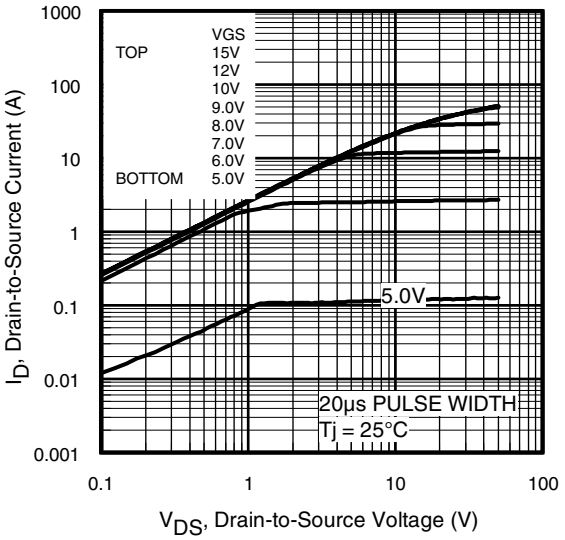

Fig 1. Typical Output Characteristics

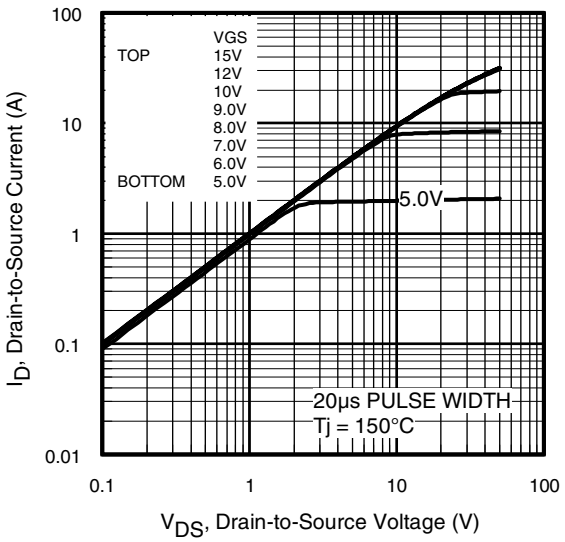

Fig 2. Typical Output Characteristics

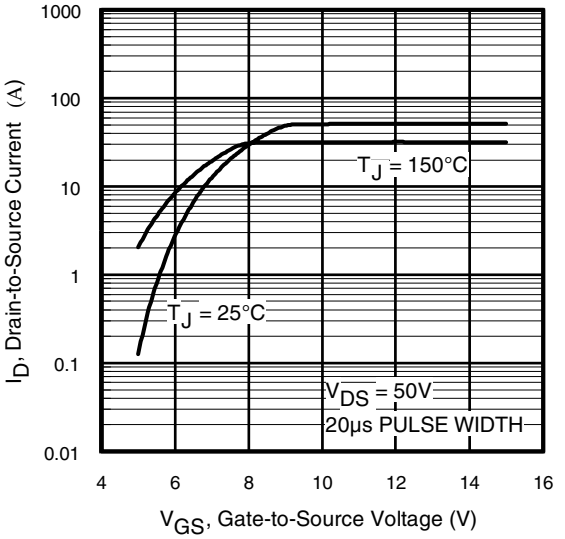

Fig 3. Typical Transfer Characteristics

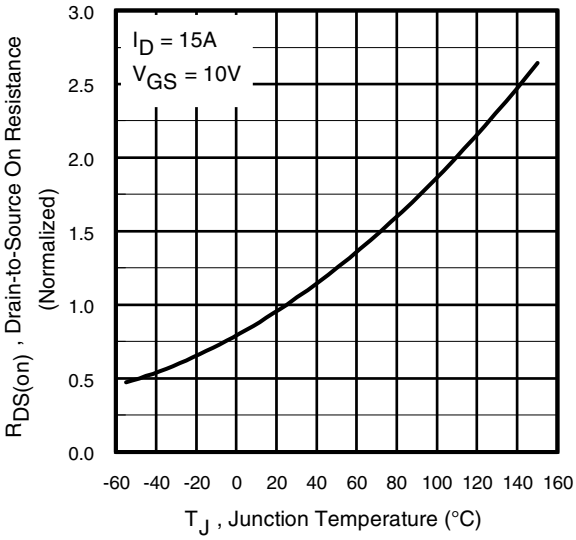

Fig 4. Normalized On-Resistance vs. Temperature

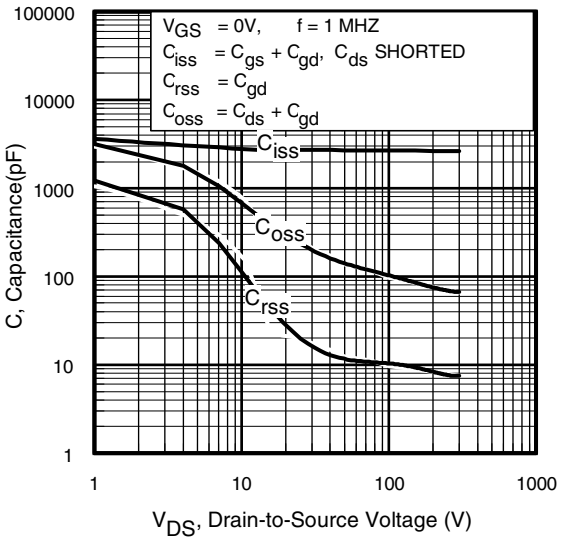

Fig 5. Typical Capacitance vs. Drain-to-Source Voltage

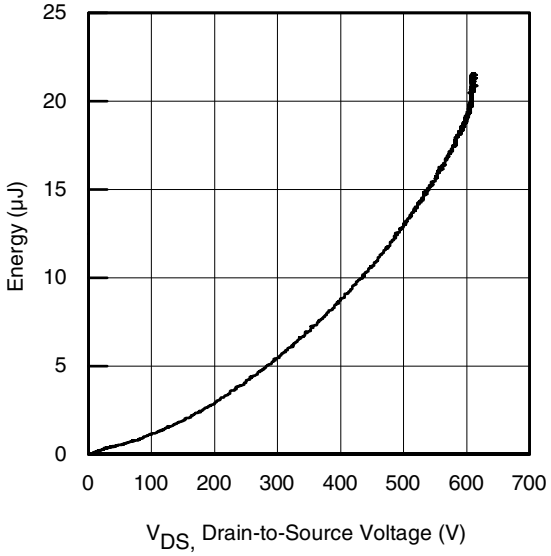

Fig 6. Typ. Output Capacitance Stored Energy vs. V_{DS}

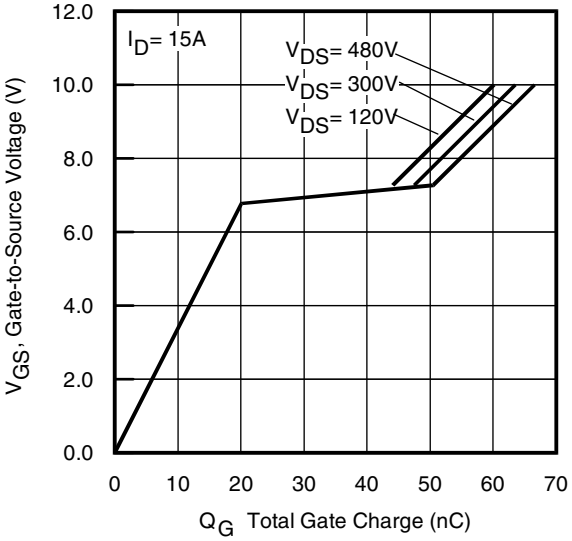

Fig 7. Typical Gate Charge vs. Gate-to-Source Voltage

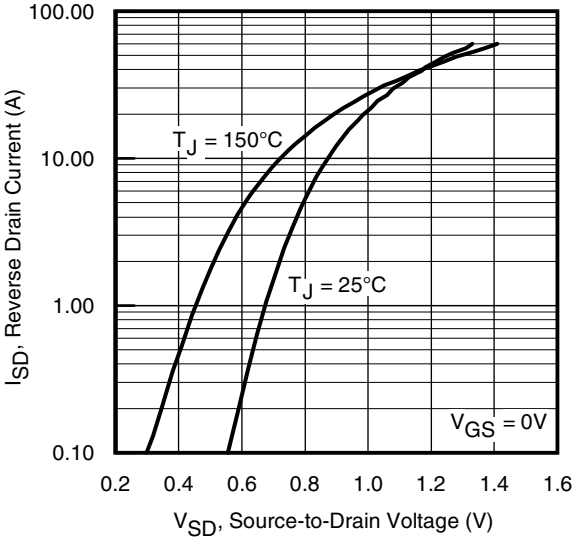

Fig 8. Typical Source-Drain Diode Forward Voltage

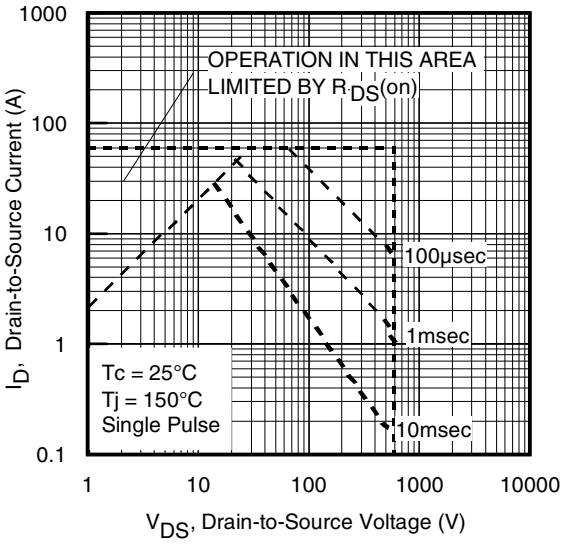

Fig 9. Maximum Safe Operating Area

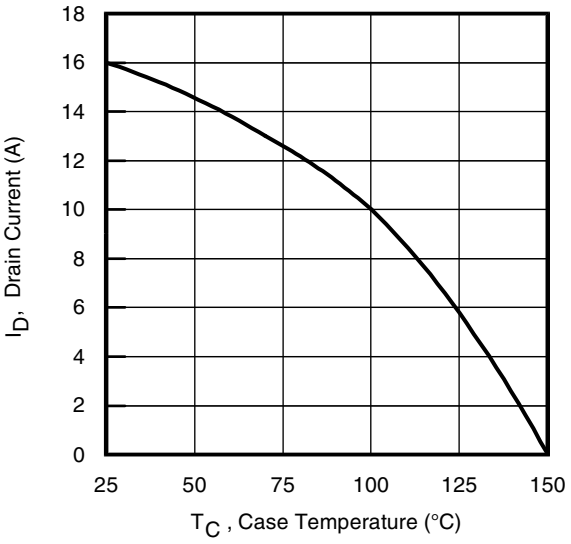

Fig 10. Maximum Drain Current vs. Case Temperature

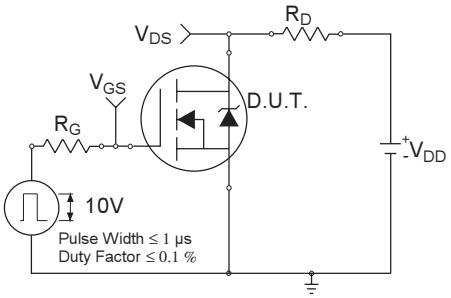

Fig 11a. Switching Time Test Circuit

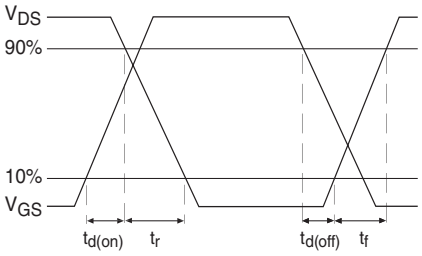

Fig 11b. Switching Time Waveforms

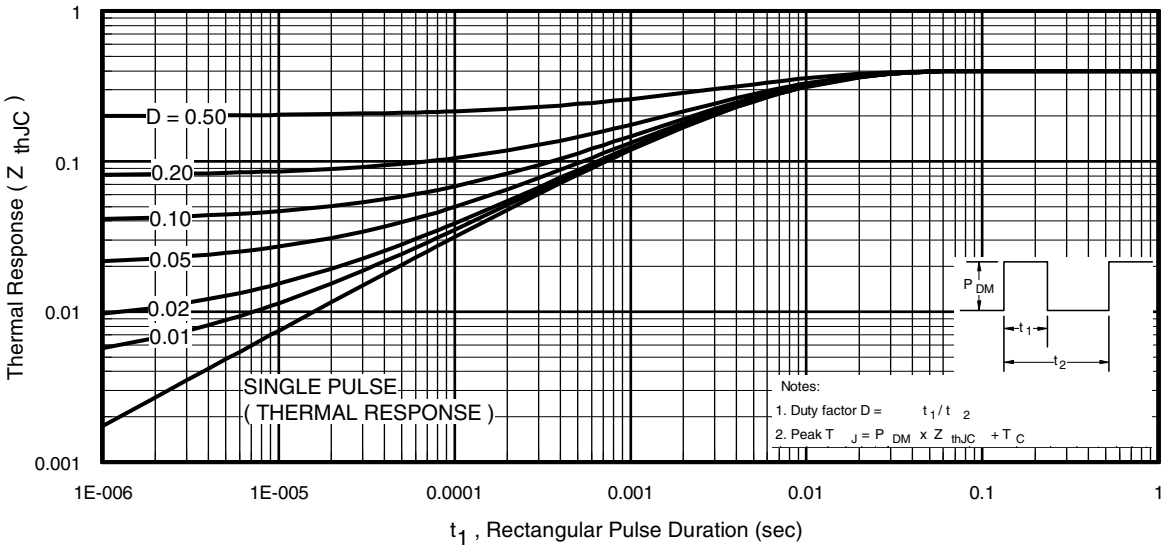

Fig 12. Maximum Effective Transient Thermal Impedance, Junction-to-Case

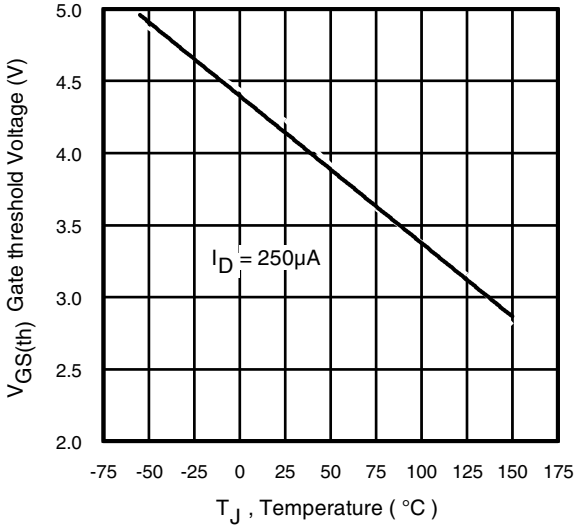

Fig 13. Threshold Voltage vs. Temperature

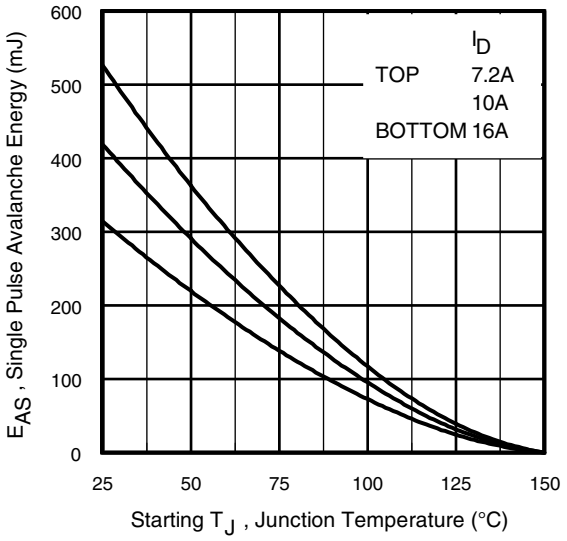

Fig 14a. Maximum Avalanche Energy vs. Drain Current

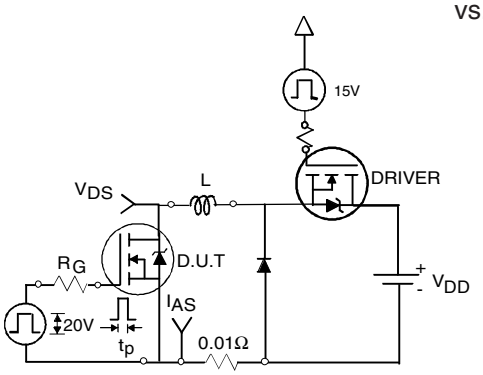

Fig 14b. Unclamped Inductive Test Circuit

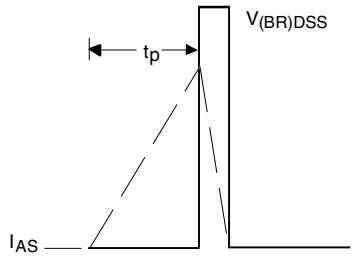

Fig 14c. Unclamped Inductive Waveforms

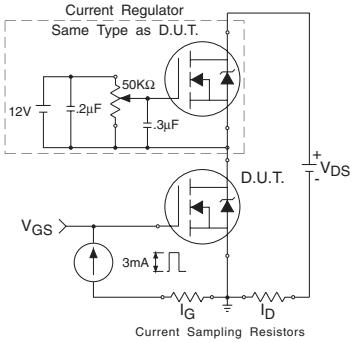

Fig 15a. Gate Charge Test Circuit

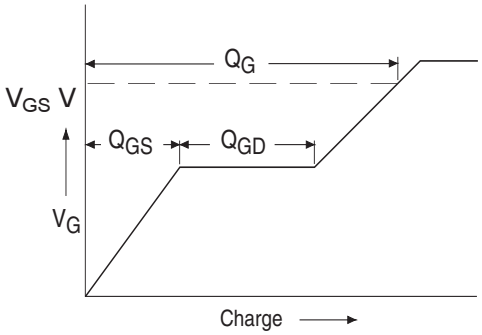

Fig 15b. Basic Gate Charge Waveform

Peak Diode Recovery dv/dt Test Circuit

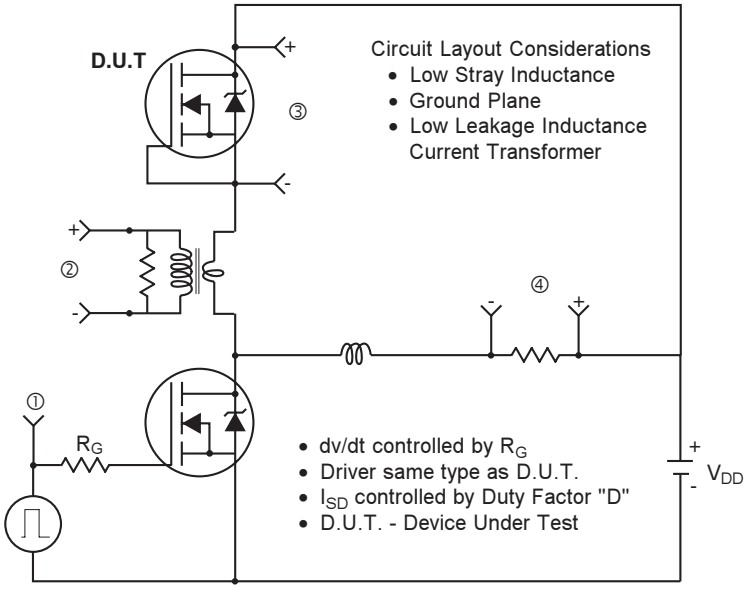

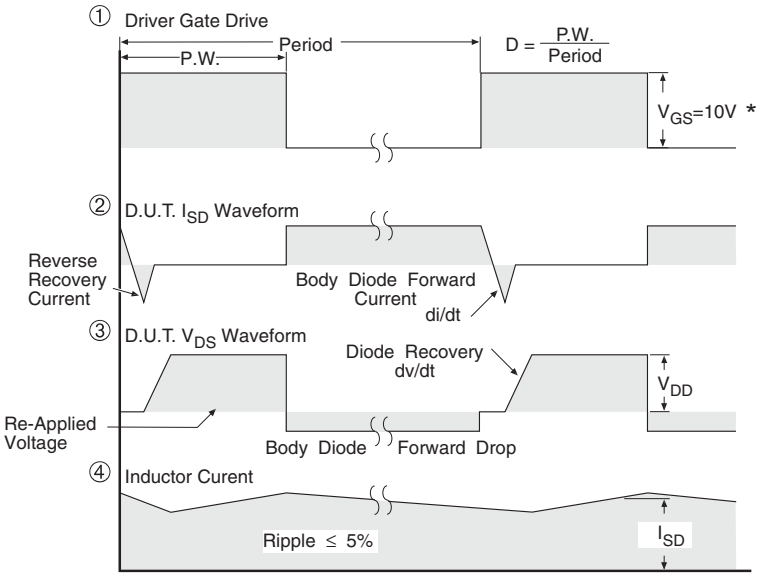

* V_{GS} = 5V for Logic Level Devices

Fig 16. For N-Channel HEXFET® Power MOSFETs

TO-220AB Package Outline

Dimensions are shown in millimeters (inches)

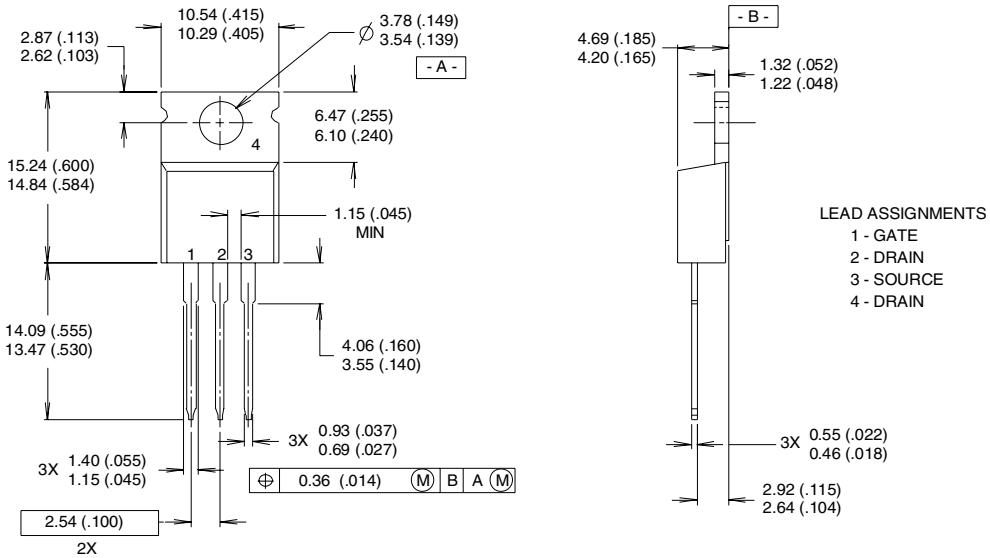

NOTES:

1 DIMENSIONING & TOLERANCING PER ANSI Y14.5M, 1982.
2 CONTROLLING DIMENSION : INCH
3 OUTLINE CONFORMS TO JEDEC OUTLINE TO-220AB.
4 HEATSINK & LEAD MEASUREMENTS DO NOT INCLUDE BURRS.

TO-220AB Part Marking Information

EXAMPLE: THIS IS AN IRF1010
LOT CODE 1789
ASSEMBLED ON WW 19, 1997
IN THE ASSEMBLY LINE 'C'

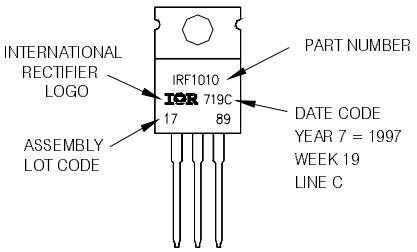

TO-220AB package is not recommended for Surface Mount Application.

Data and specifications subject to change without notice.
This product has been designed and qualified for the Automotive [Q101] market.
Qualification Standards can be found on IR's Web site.

International
IOR Rectifier

IR WORLD HEADQUARTERS: 233 Kansas St., El Segundo, California 90245, USA Tel: (310) 252-7105
TAC Fax: (310) 252-7903
Visit us at www.irf.com for sales contact information.02/03