STSJ100NH3LL

N-CHANNEL 30V - 0.0027 Ω - 100A PowerSO-8™ STripFET™ III POWER MOSFET FOR DC-DC CONVERSION

PRELIMINARY DATA

TYPE	V_{DSS}	$R_{DS(on)}$	I_D
STSJ100NH3LL	30 V	<0.0035 Ω	100 A

- TYPICAL R_{DS}(on) = 0.0027 Ω @ 10V
- OPTIMAL R_{DS}(on) x Qg TRADE-OFF @ 4.5V
- CONDUCTION LOSSES REDUCED
- SWITCHING LOSSES REDUCED
- IMPROVED JUNCTION-CASE THERMAL RESISTANCE

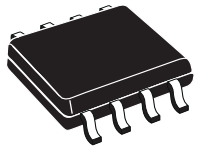

PowerSO-8™

DESCRIPTION

The STSJ100NH3LL utilizes the latest advanced design rules of ST's proprietary STripFET™ technology. This process compled to unique metallization techniques realizes the most advanced low voltage MOSFET in SO-8 ever produced. The exposed slug reduces the R_{thj-c} improving the current capability.

APPLICATIONS

- SPECIFICALLY DESIGNED AND OPTIMISED FOR HIGH EFFICIENCY CPU CORE DC/DC CONVERTERS FOR MOBILE PC$_S$

INTERNAL SCHEMATIC DIAGRAM

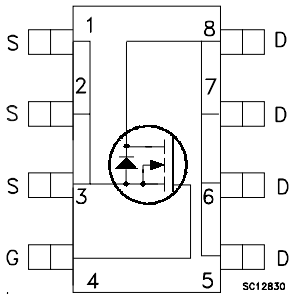

DRAIN CONTACT ALSO ON THE BACKSIDE

ABSOLUTE MAXIMUM RATINGS

Symbol	Parameter	Value	Unit
V_{DS}	Drain-source Voltage (V_{GS} = 0)	30	V
V_{DGR}	Drain-gate Voltage (R_{GS} = 20 kΩ)	30	V
V_{GS}	Gate- source Voltage	± 18	V
I_D	Drain Current (continuous) at T_C = 25°C	100	A
I_D	Drain Current (continuous) at T_C = 25°C (#)	22	A
I_D	Drain Current (continuous) at T_C = 100°C	62.5	A
I_{DM}(•)	Drain Current (pulsed)	400	A
P_{tot}	Total Dissipation at T_C = 25°C Total Dissipation at T_C = 25°C (#)	70 3	W W

(•) Pulse width limited by safe operating area.

This is preliminary information on a new product now in development or undergoing evaluation. Details are subject to change without notice.

THERMAL DATA

Rthj-c	Thermal Resistance Junction-case	Max	1.8	°C/W
Rthj-amb	(#)Thermal Resistance Junction-ambient	Max	42	°C/W
T_j	Maximum Operating Junction Temperature		150	°C
T_{stg}	Storage Temperature		-55 to 150	°C

(#) When Mounted on FR-4 board with 1 inch^2 pad, 2 oz of Cu and t $\leq$ 10 sec.

ELECTRICAL CHARACTERISTICS (T_{case} = 25 °C unless otherwise specified)

OFF

Symbol	Parameter	Test Conditions	Min.	Typ.	Max.	Unit
$V_{(BR)DSS}$	Drain-source Breakdown Voltage	I_D = 250 µA, V_{GS} = 0	30			V
I_{DSS}	Zero Gate Voltage Drain Current (V_{GS} = 0)	V_{DS} = Max Rating V_{DS} = Max Rating T_C = 125°C			1 10	µA µA
I_{GSS}	Gate-body Leakage Current (V_{DS} = 0)	V_{GS} = ± 18 V			±100	nA

ON (*)

Symbol	Parameter	Test Conditions	Min.	Typ.	Max.	Unit
$V_{GS(th)}$	Gate Threshold Voltage	V_{DS} = V_{GS} I_D = 250 µA	1			V
$R_{DS(on)}$	Static Drain-source On Resistance	V_{GS} = 10 V I_D = 50 A V_{GS} = 4.5 V I_D = 50 A		0.0027 0.0035	0.0035 0.005	Ω Ω

DYNAMIC

Symbol	Parameter	Test Conditions	Min.	Typ.	Max.	Unit
g_{fs} (*)	Forward Transconductance	V_{DS}=10 V I_D = 12 A		30		S
C_{iss} C_{oss} C_{rss}	Input Capacitance Output Capacitance Reverse Transfer Capacitance	V_{DS} = 25V, f = 1 MHz, V_{GS} = 0		4450 655 50		pF pF pF

ELECTRICAL CHARACTERISTICS (continued)

SWITCHING ON

Symbol	Parameter	Test Conditions	Min.	Typ.	Max.	Unit
$t_{d(on)}$ t_r	Turn-on Delay Time Rise Time	V_{DD} = 15 V I_D = 50 A R_G = 4.7 Ω V_{GS} = 10 V (Resistive Load, Figure 1)		18 50		ns ns
Q_g Q_{gs} Q_{gd}	Total Gate Charge Gate-Source Charge Gate-Drain Charge	V_{DD}=15V I_D=100A V_{GS}=4.5V (see test circuit, Figure 2)		32 12.5 10	43	nC nC nC

SWITCHING OFF

Symbol	Parameter	Test Conditions	Min.	Typ.	Max.	Unit
$t_{d(off)}$ t_f	Turn-off Delay Time Fall Time	V_{DD} = 15 V I_D = 50 A R_G = 4.7Ω, V_{GS} = 10 V (Resistive Load, Figure 3)		75 8		ns ns

SOURCE DRAIN DIODE

Symbol	Parameter	Test Conditions	Min.	Typ.	Max.	Unit
I_{SD} I_{SDM} (•)	Source-drain Current Source-drain Current (pulsed)				100 400	A A
V_{SD} (*)	Forward On Voltage	I_{SD} = 100 A V_{GS} = 0			1.2	V
t_{rr} Q_{rr} I_{RRM}	Reverse Recovery Time Reverse Recovery Charge Reverse Recovery Current	I_{SD} = 100 A di/dt = 100A/µs V_{DD} = 25 V T_j = 150°C (see test circuit, Figure 3)		32 34 2.1		ns nC A

(*)Pulsed: Pulse duration = 300 µs, duty cycle 1.5 %.
(•)Pulse width limited by safe operating area.

Fig. 1: Switching Times Test Circuits For Resistive Load

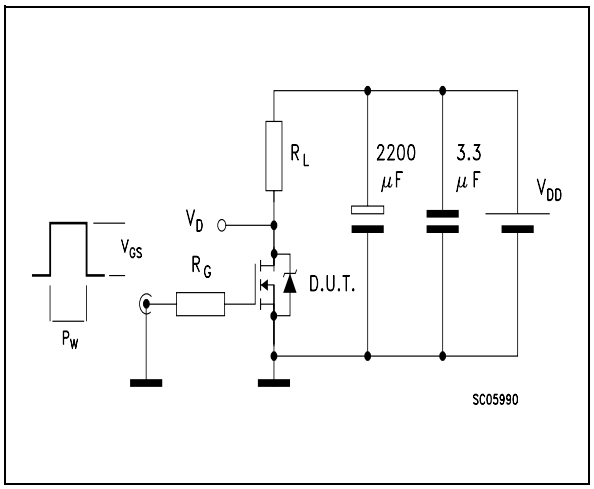

Fig. 2: Gate Charge test Circuit

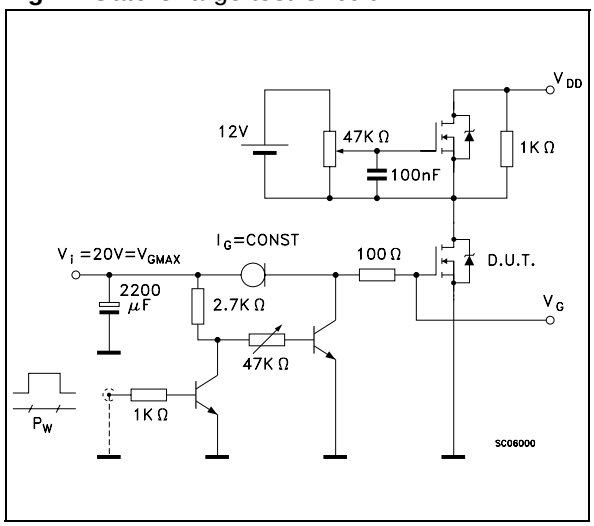

Fig. 3: Test Circuit For Diode Recovery Behaviour

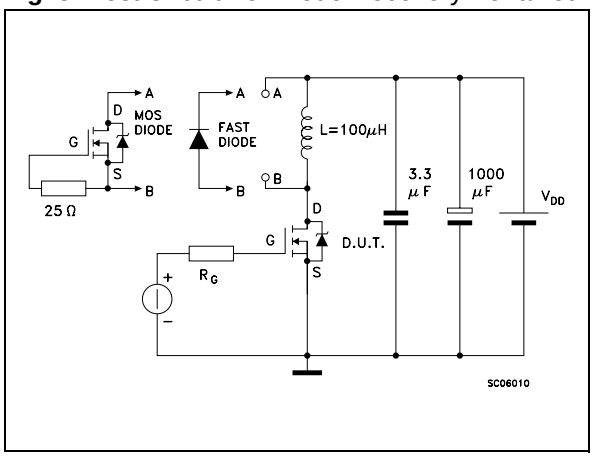

PowerSO-8™ MECHANICAL DATA

DIM.	mm.			inch		
	MIN.	TYP	MAX.	MIN.	TYP.	MAX.
A			1.75			0.068
a1	0.1		0.25	0.003		0.009
a2			1.65			0.064
a3	0.65		0.85	0.025		0.033
b	0.35		0.48	0.013		0.018
b1	0.19		0.25	0.007		0.010
C	0.25		0.5	0.010		0.019
c1	45° (typ.)					
D	4.8		5.0	0.188		0.196
E	5.8		6.2	0.228		0.244
e		1.27			0.050	
e3		3.81			0.150	
e4		2.79			0.110	
F	3.8		4.0	0.14		0.157
L	0.4		1.27	0.015		0.050
M			0.6			0.023
S	8° (max.)					

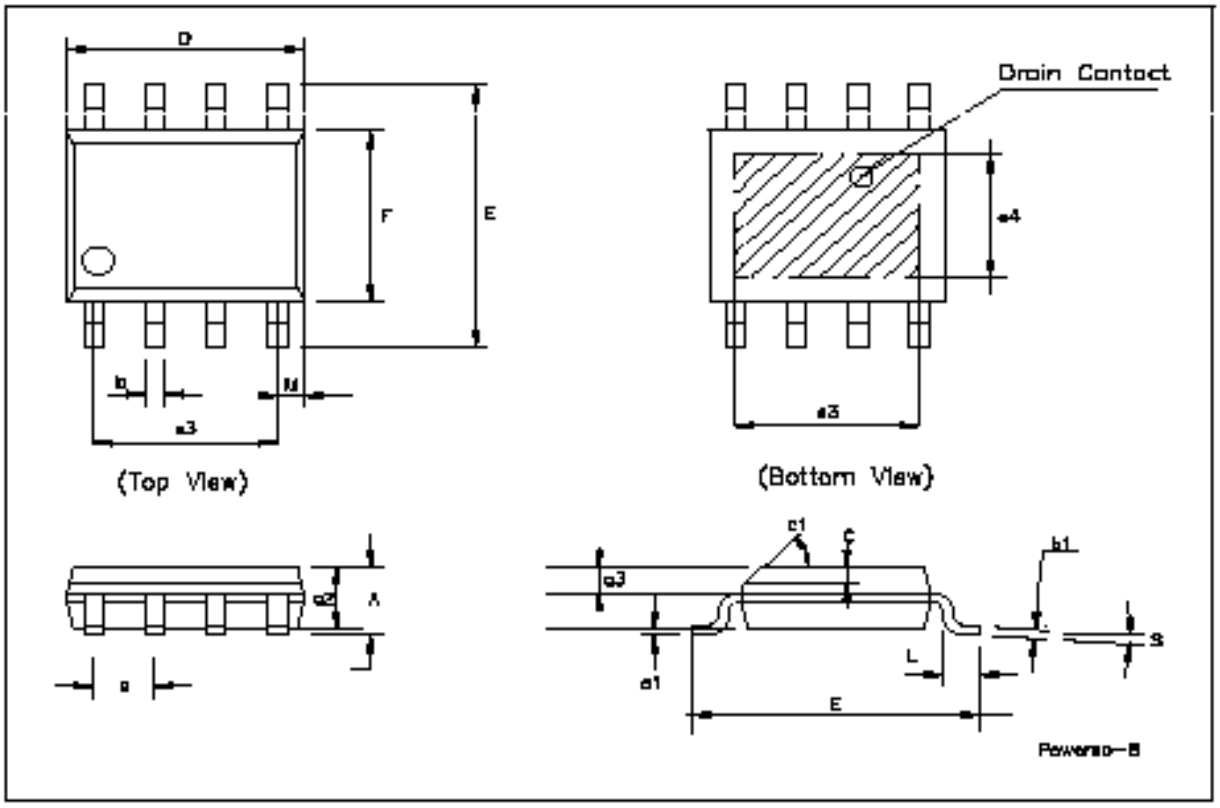

Information furnished is believed to be accurate and reliable. However, STMicroelectronics assumes no responsibility for the consequences of use of such information nor for any infringement of patents or other rights of third parties which may result from its use. No license is granted by implication or otherwise under any patent or patent rights of STMicroelectronics. Specifications mentioned in this publication are subject to change without notice. This publication supersedes and replaces all information previously supplied. STMicroelectronics products are not authorized for use as critical components in life support devices or systems without express written approval of STMicroelectronics.

The ST logo is registered trademark of STMicroelectronics
® 2002 STMicroelectronics - All Rights Reserved

All other names are the property of their respective owners.

STMicroelectronics GROUP OF COMPANIES
Australia - Brazil - Canada - China - Finland - France - Germany - Hong Kong - India - Israel - Italy - Japan - Malaysia - Malta - Morocco - Singapore - Spain - Sweden - Switzerland - United Kingdom - United States.

http://www.st.com