TDA7497SA

8W+8W+15W TRIPLE AMPLIFIER

PRODUCT PREVIEW

1 FEATURES

- 8+8W (RL = 8Ω) + 15W (RL = 4Ω) OUTPUT POWER @THD = 10%, Vcc = 25V
- INDEPENDENT MUTE FOR CENTER CHANNEL AND MAIN CHANNELS
- NO TURN-ON TURN-OFF POP NOISE
- NO BOUCHEROT CELL
- SINGLE SUPPLY RANGING UP TO 35V
- SHORT CIRCUIT PROTECTION
- THERMAL OVERLOAD PROTECTION
- INTERNALLY FIXED GAIN
- SOFT CLIPPING
- CLIPWATT 15 PACKAGE

Figure 1. Package

Clipwatt15

Table 1. Order Codes

Part Number	Package
TDA7497SA	Clipwatt15

2 DESCRIPTION

The TDA7497SA is a triple 8+8+15W class AB power amplifier assembled in the @ Clipwatt 15 package, specially designed for high quality sound, TV applications.

Features of the TDA7497SA include mute functions independently controlled for main and center channels.

Figure 2. Block Diagram

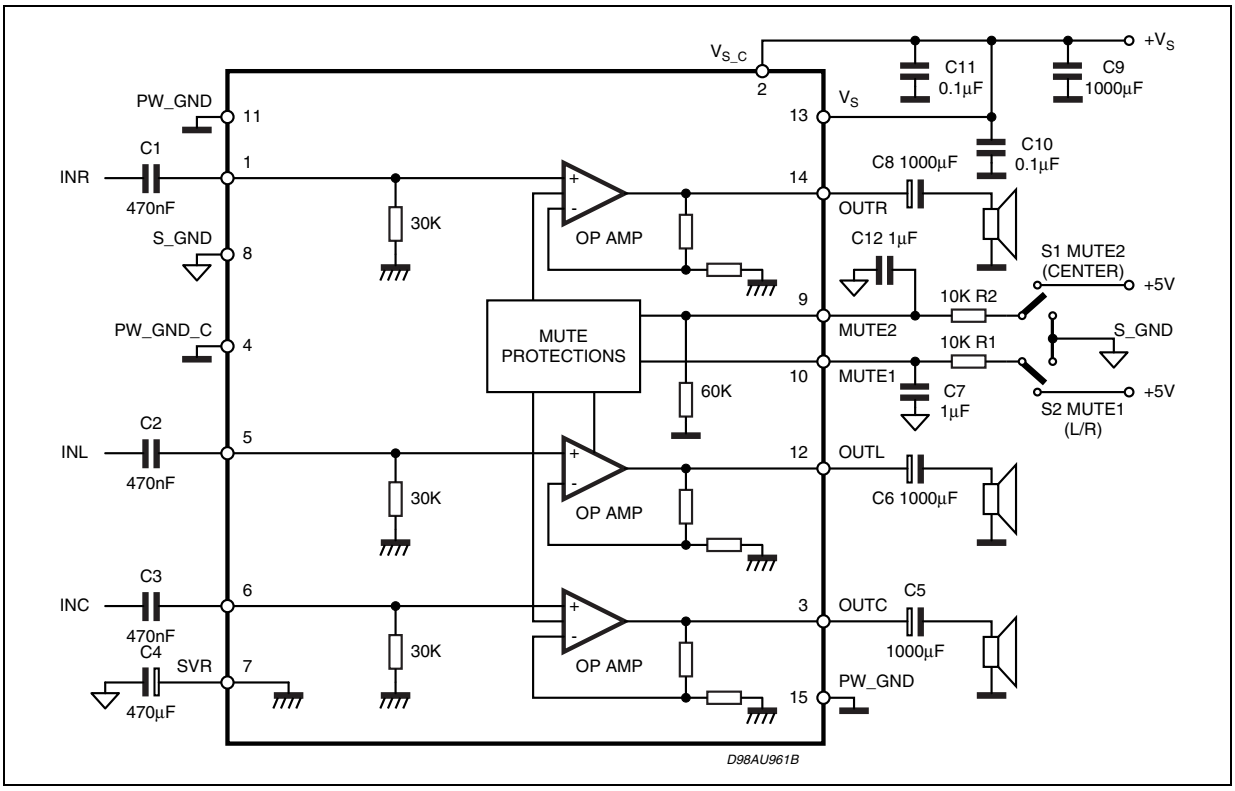

This is preliminary information on a new product now in development. Details are subject to change without notice.

Table 2. Absolute Maximum Ratings

Symbol	Parameter	Value	Unit
V_S	DC Supply Voltage	35	V
P_{tot}	Total Power Dissipation (Tamb = 70°C)	30	W
T_{amb}	Ambient Operating Temperature (1)	0 to 70	°C
T_{stg}, T_j	Storage and Junction Temperature	-40 to 150	°C

(1) Operation between -20 to 85°C guaranteed by correlation with 0 to 70°C.

Figure 3. Pin Connection (Top view)

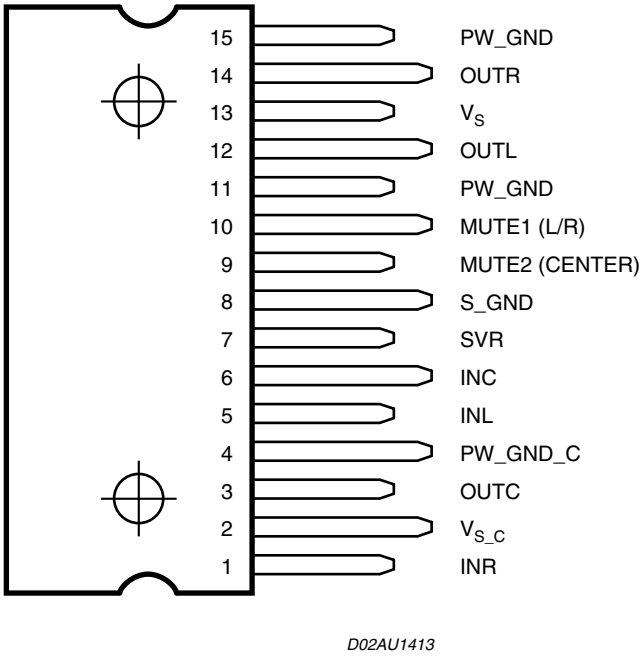

Table 3. Thermal Data

Symbol	Parameter	Value	Unit
$R_{th\ j\text{-}case}$	Thermal Resistance Junction-case	Typ.=1.5 max = 2.5	°C/W
$R_{th\ j\text{-}amb}$	Thermal Resistance Junction-ambient	max = 48	°C/W

Table 4. Electrical Characteristcs (Refer to the test circuit V_S = 25V; R_g = 50Ω; f = 1KHz; T_{amb} = 25°C)

Symbol	Parameter	Test Condition	Min.	Typ.	Max.	Unit
V_S	Supply Voltage Range		11		30	V
I_q	Total Quiescent Current			60	100	mA
V_O	Quiescent Output Voltage		11.5	12.5	13.5	V
$P_{O_L/R}$	Output Power Left / RightChannels	THD = 10%; RL = 8Ω; THD = 1%; RL = 8Ω;	6 5	8 6		W W
P_{O_C}	Output Power Center Channel	THD = 10%; RL = 4Ω THD = 1%; RL = 4Ω	12 10	15 12		W W
THD	Total Harmonic Distortion	P_O = 1W; f = 1KHz;			0.4	%
$I_{peak\ L/R}$	Output Peak Current	(internally limited)		2.0		A
$I_{peak\ C}$	Output Peak Current Central Channel	(internally limited)		2.5		A
GV	Closed Loop Gain		28.5	29.5	30.5	dB
ΔGV	L/R Voltage GainMatching		-1		1	dB
BW				0.6		MHz
e_N	Total Output Noise	f = 20Hz to 22KHz		60	150	μV
SR	Slew Rate		5	8		V/μs
R_i	Input Resistance		22.5	30		KΩ
SVR	Supply Voltage Rejection	f = 1kHzCSVR = 470mF; VRIP = 1Vrms	50	60		dB
T_M	Thermal Muting			150		°C
T_s	Thermal Shut-down			160		°C
MUTE & INPUT SELECTION FUNCTIONS						
V_{MUTE1}	Mute 1 ON threshold (L/R)		3.5			V
	Mute 1 OFF threshold (L/R)				1.5	V
V_{MUTE2}	Mute 2 ON threshold (center)		3.5			V
	Mute 2 OFF threshold (center)				1.5	V
A_{MUTE}	Mute Attenuation		50	65		dB
$I_{muteBIAS}$	Mute bias currentMute1/Mute2	Mute		1	5	μA
		St-By		0.2	2	μA

Figure 4. PC Board and Component Layout

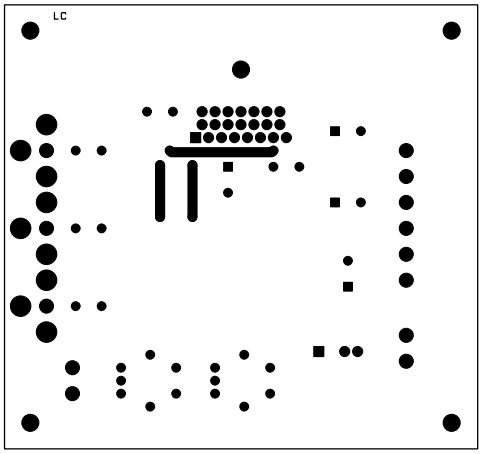

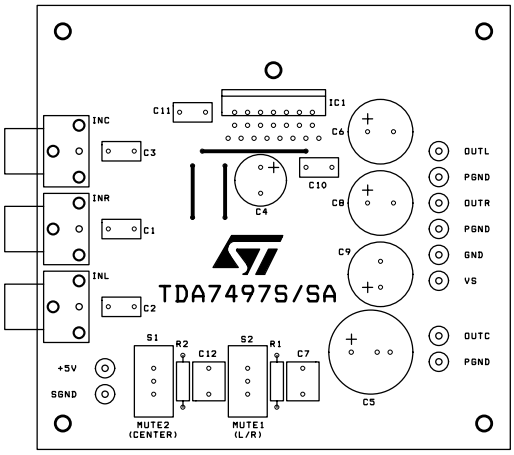

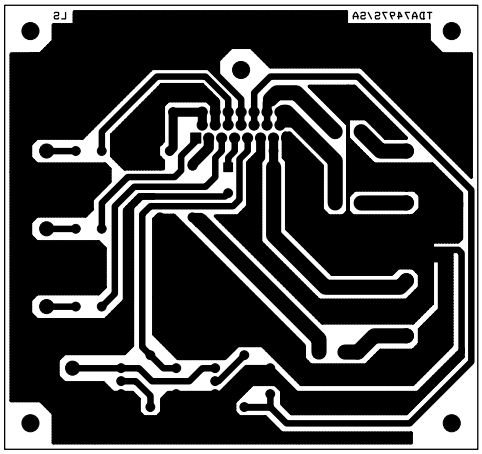

Figure 5. Output Power vs Supply Voltage

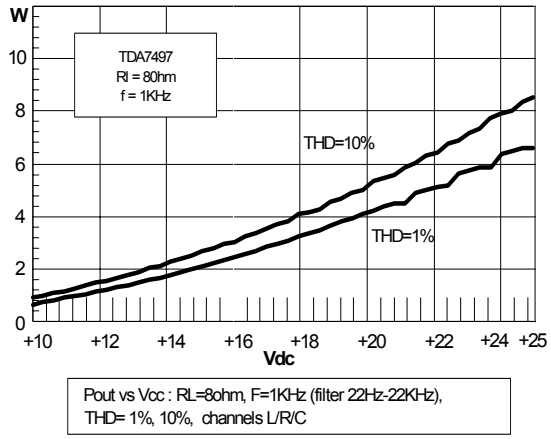

Figure 6. Frequency Response

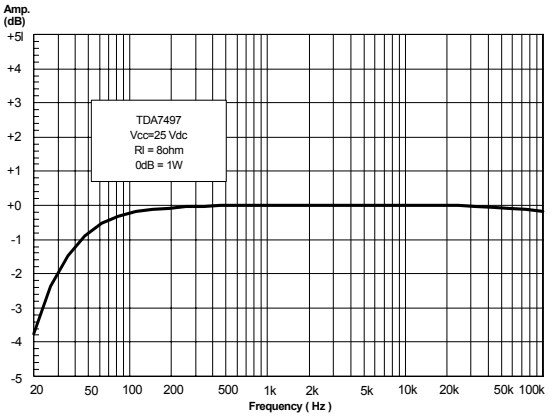

Figure 7. THD+N vs Output Power

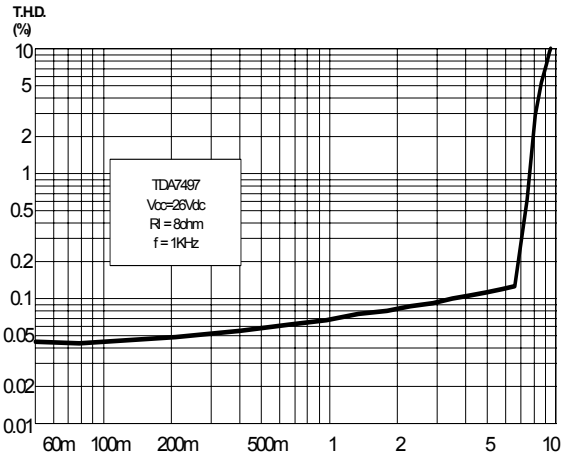

Figure 8. Pdiss vs Output Power

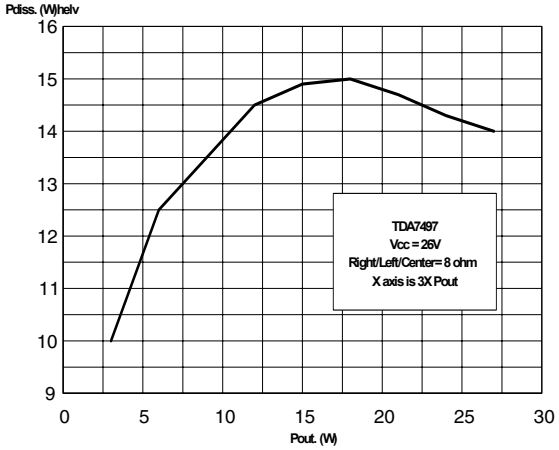

Figure 9. Output power vs Supply Voltage

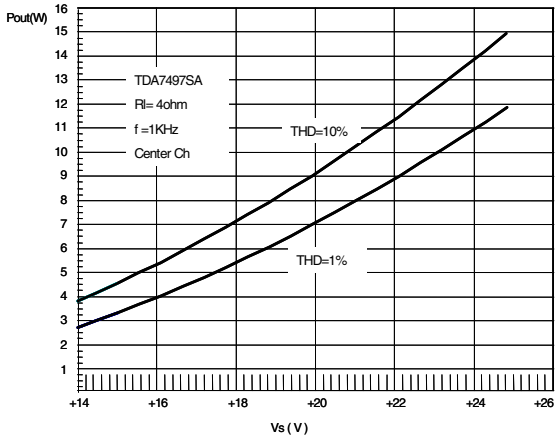

Figure 10. THD+N vs Output Power

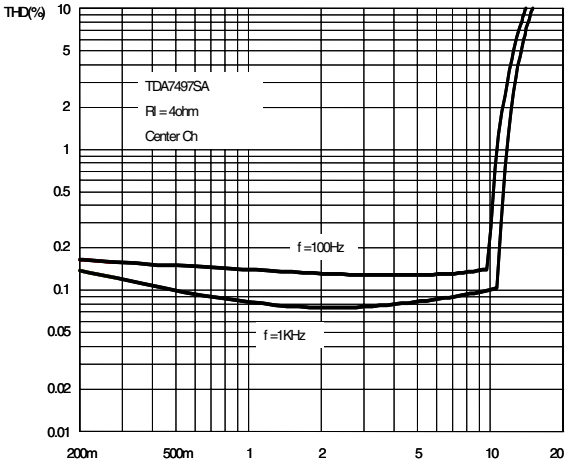

3 HEAT SINK DIMENSIONING:

In order to avoid the thermal protection intervention, that is placed approximatively at T_j = 150°C, it is important the dimensioning of the Heat Sinker R_{Th} (°C/W).

The parameters that influence the dimensioning are:

- Maximum dissipated power for the device (P_{dmax})
- Max thermal resistance Junction to case ($R_{Th\ j\text{-}c}$)
- Max. ambient temperature $T_{amb\ max}$
- Quiescent current I_q (mA)

3.1 Example:

V_{CC} = 28V, R_{load} = 8ohm (left/right), Rload = 4ohm (centre), $R_{Th\ j\text{-}c}$ = 2.5°C/W , $T_{amb\ max}$ = 50°C

$$P_{dmax} = (N° \text{ channels}) \cdot \frac{V_{cc}^2}{2\Pi^2 \cdot R_{load}} + I_q \cdot V_{cc}$$

P_{dmax} = 2 · (3.95) + 1 · (7.9) + 1.2 = 17W

$$\text{(Heat Sinker)} \quad R_{Th\ c\text{-}a} = \frac{150 - T_{amb\ max}}{P_{d\ max}} - R_{Th\ j\text{-}c} = \frac{150 - 50}{17} - 2.5 = 3.3°C/W$$

In figure 6 is shown the Power derating curve for the device.

Figure 11. Power Derating Curve

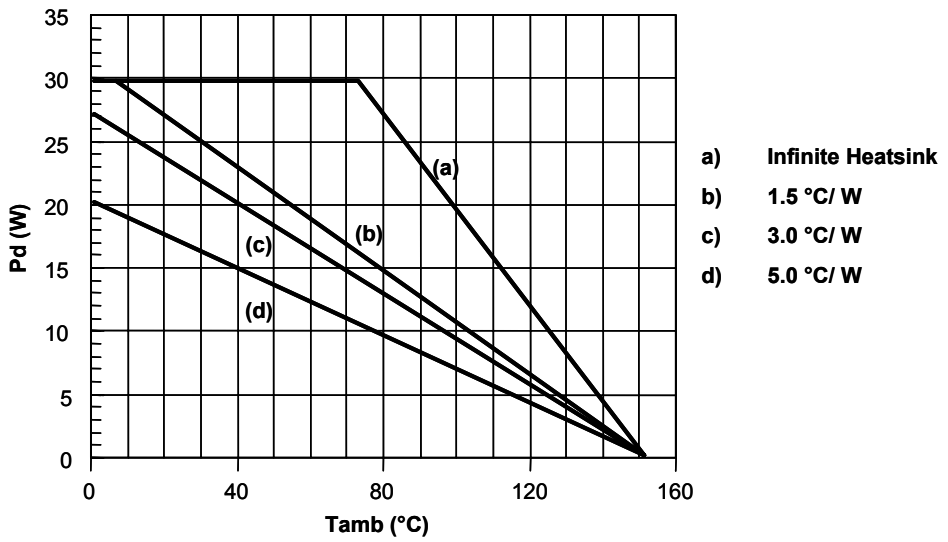

3.2 Clipwatt Assembling Suggestions

The suggested mounting method of Clipwatt on external heat sink, requires the use of a clip placed as much as possible in the plastic body center, as indicated in the example of figure 7.

A thermal grease can be used in order to reduce the additional thermal resistance of the contact between package and heatsink.

A pressing force of 7 - 10 Kg gives a good contact and the clip must be designed in order to avoid a maximum contact pressure of 15 Kg/mm2 between it and the plastic body case.

As example , if a 15Kg force is applied by the clip on the package , the clip must have a contact area of 1mm2 at least.

Figure 12. Example of Right Placement of the Clip

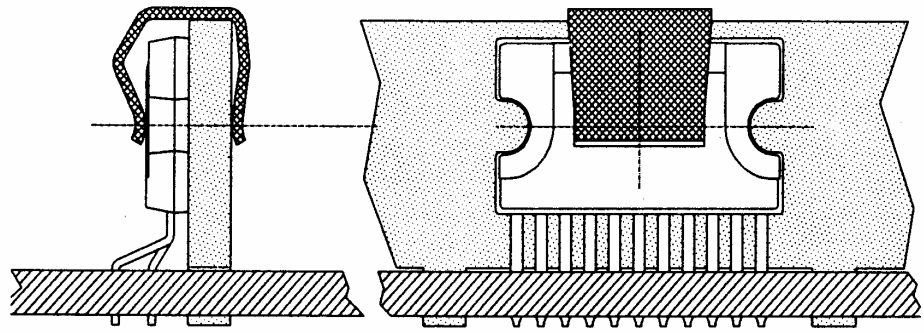

Figure 1. Clipwatt15 Mechanical Data & Package Dimensions

DIM.	mm			inch		
	MIN.	TYP.	MAX.	MIN.	TYP.	MAX.
A			3.2			0.126
B			1.05			0.041
C		0.15			0.006	
D		1.50			0.061	
E	0.49		0.55	0.019		0.022
F	0.67		0.73	0.026		0.029
G	1.14	1.27	1.4	0.045	0.050	0.055
G1	17.57	17.78	17.91	0.692	0.700	0.705
H1		12			0.480	
H2		18.6			0.732	
H3	19.85			0.781		
L		17.9			0.704	
L1		14.55			0.572	
L2	10.7	11	11.2	0.421	0.433	0.441
L3		5.5			0.217	
M		2.54			0.100	
M1		2.54			0.100	

OUTLINE AND MECHANICAL DATA

Weight: 1.92gr

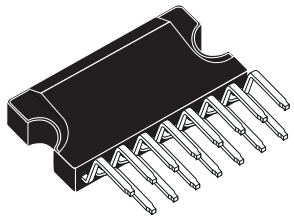

Clipwatt15

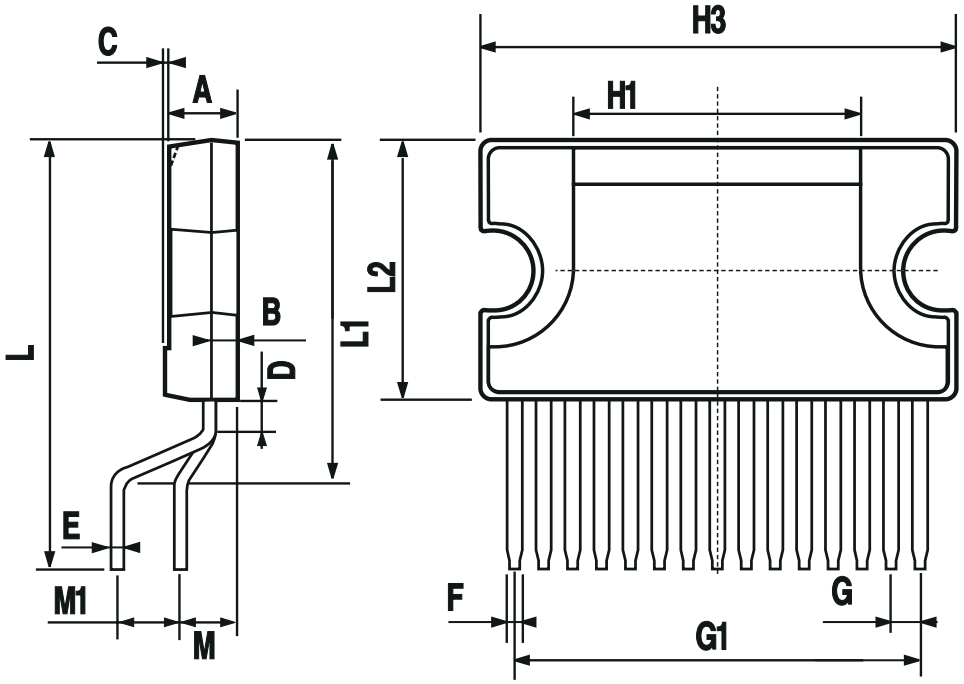

Table 1. Revision History

Date	Revision	Description of Changes
September 2003	1	First Issue in EDOCS
November 2004	2	Changed Style Sheet and add. figs. 9 and 10
February 13, 2005	3	Modified fig 2 in pag 1. and V_{MUTE} in table 4

Information furnished is believed to be accurate and reliable. However, STMicroelectronics assumes no responsibility for the consequences of use of such information nor for any infringement of patents or other rights of third parties which may result from its use. No license is granted by implication or otherwise under any patent or patent rights of STMicroelectronics. Specifications mentioned in this publication are subject to change without notice. This publication supersedes and replaces all information previously supplied. STMicroelectronics products are not authorized for use as critical components in life support devices or systems without express written approval of STMicroelectronics.

The ST logo is a registered trademark of STMicroelectronics.
All other names are the property of their respective owners

© 2005 STMicroelectronics - All rights reserved

STMicroelectronics group of companies
Australia - Belgium - Brazil - Canada - China - Czech Republic - Finland - France - Germany - Hong Kong - India - Israel - Italy - Japan - Malaysia - Malta - Morocco - Singapore - Spain - Sweden - Switzerland - United Kingdom - United States of America
www.st.com