19-0498; Rev 1; 10/00

±15kV ESD-Protected, 10Mbps, 3V/5V, Quad RS-422/RS-485 Receivers

General Description

The MAX3095/MAX3096 are rugged, low-power, quad, RS-422/RS-485 receivers with electrostatic discharge (ESD) protection for use in harsh environments. All receiver inputs are protected to ±15kV using IEC 1000-4-2 Air-Gap Discharge, ±8kV using IEC 1000-4-2 Contact Discharge, and ±15kV using the Human Body Model. The MAX3095 operates from a +5V supply, while the MAX3096 operates from a +3.3V supply. Receiver propagation delays are guaranteed to within ±8ns of a predetermined value, thereby ensuring device-to-device matching across production lots.

Complementary enable inputs can be used to place the devices in a 1nA low-power shutdown mode in which the receiver outputs are high impedance. When active, these receivers have a fail-safe feature that guarantees a logic-high output if the input is open circuit. They also feature a quarter-unit-load input impedance that allows 128 receivers on a bus.

The MAX3095/MAX3096 are pin-compatible, low-power upgrades to the industry-standard ’26LS32. They are available in a space-saving QSOP package.

Applications

Telecommunications Equipment

Rugged RS-422/RS-485/RS-423 Bus Receiver

Receivers for ESD-Sensitive Applications

Level Translators

Functional Diagram

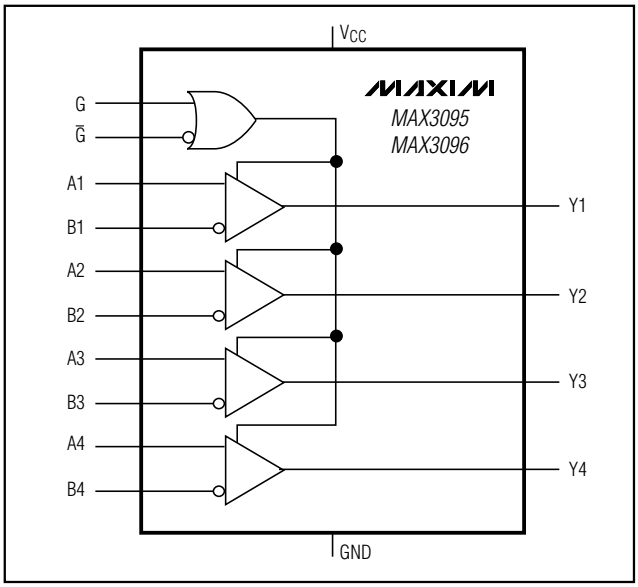

Features

- ♦ **ESD Protection:**
  ±15kV—IEC 1000-4-2, Air-Gap Discharge
  ±8kV—IEC 1000-4-2, Contact Discharge
  ±15kV—Human Body Model
- ♦ **Guaranteed Propagation-Delay Tolerance Between All ICs:**
  ±8ns (MAX3095)
  ±10ns (MAX3096)
- ♦ **Single +3V Operation (MAX3096)**
  Single +5V Operation (MAX3095)
- ♦ **16-Pin QSOP (8-pin SO footprint)**
- ♦ **10Mbps Data Rate**
- ♦ **Allow up to 128 Receivers on the Bus**
- ♦ **1nA Low-Power Shutdown Mode**
- ♦ **2.4mA Operating Supply Current**
- ♦ **Pin-Compatible Upgrades to ’26LS32**

Ordering Information

PART	TEMP. RANGE	PIN-PACKAGE
MAX3095CPE	0°C to +70°C	16 Plastic DIP
MAX3095CSE	0°C to +70°C	16 Narrow SO
MAX3095CEE	0°C to +70°C	16 QSOP
MAX3095EPE	-40°C to +85°C	16 Plastic DIP
MAX3095ESE	-40°C to +85°C	16 Narrow SO
MAX3095EEE	-40°C to +85°C	16 QSOP
MAX3096CPE	0°C to +70°C	16 Plastic DIP
MAX3096CSE	0°C to +70°C	16 Narrow SO
MAX3096CEE	0°C to +70°C	16 QSOP
MAX3096EPE	-40°C to +85°C	16 Plastic DIP
MAX3096ESE	-40°C to +85°C	16 Narrow SO
MAX3096EEE	-40°C to +85°C	16 QSOP

Pin Configuration

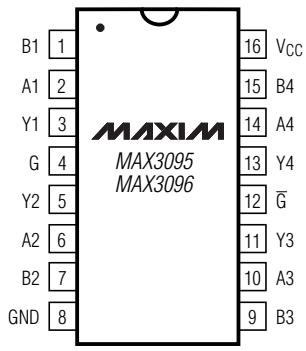

DIP/SO/QSOP

For pricing, delivery, and ordering information, please contact Maxim/Dallas Direct! at 1-888-629-4642, or visit Maxim’s website at www.maxim-ic.com.

±15kV ESD-Protected, 10Mbps, 3V/5V, Quad RS-422/RS-485 Receivers

ABSOLUTE MAXIMUM RATINGS

Supply Voltage (V_{CC}) 7V
Control Input Voltage (G, $\overline{G}$) ..... -0.3V to (V_{CC} + 0.3V)
Receiver Input Voltage (A_, B_) ..... ±25V
Receiver Output Voltage (Y_) ..... -0.3V to (V_{CC} + 0.3V)
Continuous Power Dissipation (T_A = +70°C)
16-Pin Plastic DIP (derate 10.5mW/°C above +70°C) .762mW
16-Pin SO (derate 8.7mW/°C above +70°C) 696mW
16-Pin QSOP (derate 8.3mW/°C above +70°C) 667mW

Operating Temperature Ranges
MAX309_C_ _ ..... 0°C to +70°C
MAX309_E_ _ ..... -40°C to +85°C
Storage Temperature Range ..... -65°C to +160°C
Lead Temperature (soldering, 10s) ..... +300°C

Stresses beyond those listed under "Absolute Maximum Ratings" may cause permanent damage to the device. These are stress ratings only, and functional operation of the device at these or any other conditions beyond those indicated in the operational sections of the specifications is not implied. Exposure to absolute maximum rating conditions for extended periods may affect device reliability.

DC ELECTRICAL CHARACTERISTICS—MAX3095

(V_{CC} = 5V ±5%, T_A = T_{MIN} to T_{MAX}, unless otherwise noted. Typical values are at T_A = +25°C.) (Note 1)

PARAMETER	SYMBOL	CONDITIONS		MIN	TYP	MAX	UNITS
Receiver Differential Input Threshold	V_{TH}	-7V ≤ V_{CM} ≤ 12V		-200		200	mV
Receiver Input Hysteresis		V_{CM} = 0			45		mV
Receiver Input Current (A_, B_)	I_{IN}	V_{CC} = 0 or 5.25V	V_{IN} = 12V			250	µA
			V_{IN} = -7V			-200	
Enable Input Current (G, $\overline{G}$)						±1	µA
Enable Input High Voltage (G, $\overline{G}$)	V_{IH}			2.0			V
Enable Input Low Voltage (G, $\overline{G}$)	V_{IL}					0.8	V
Receiver Output High Voltage	V_{OH}	I_{OUT} = -4mA, V_{ID} = 200mV, G = V_{CC} or $\overline{G}$ = GND, Figure 1		V_{CC} - 1.5			V
Receiver Output Low Voltage	V_{OL}	I_{OUT} = 4mA, V_{ID} = -200mV, G = V_{CC} or $\overline{G}$ = GND, Figure 1				0.4	V
Three-State Current at Receiver Output	I_{OZR}	0 ≤ V_{OUT} ≤ V_{CC}, G = GND and $\overline{G}$ = V_{CC}				±1	µA
Output Short-Circuit Current	I_{OSR}	0 ≤ V_{OUT} ≤ V_{CC}, G = V_{CC} or $\overline{G}$ = GND		±7		±75	mA
Receiver Input Resistance	R_{IN}	-7V ≤ V_{CM} ≤ 12V		48			kΩ
Supply Current	I_{CC}	No load, G = V_{CC} or $\overline{G}$ = GND			2.4	3.5	mA
		G = GND and $\overline{G}$ = V_{CC}			0.001	10	µA
ESD Protection (Note 2)		Human Body Model			±15		kV
		IEC1000-4-2 (Air-Gap Discharge)			±15		
		IEC1000-4-2 (Contact Discharge)			±8		

SWITCHING CHARACTERISTICS—MAX3095

(V_{CC} = 5V ±5%, T_A = T_{MIN} to T_{MAX}, unless otherwise noted. Typical values are at T_A = +25°C.)

PARAMETER	SYMBOL	CONDITIONS			MIN	TYP	MAX	UNITS
Input-to-Output Propagation Delay	t_{PLH}, t_{PHL}	V_{CC} = 5V ±5%, T_A = T_{MIN} to T_{MAX}			65		98	ns
		$\lvert V_{ID}\rvert$ = 3V, Figure 2	V_{CC} = 5.25V	T_A = +85°C	78	86	94	
				T_A = +25°C	71	79	87	
				T_A = -40°C	65	73	81	
			V_{CC} = 4.75V	T_A = +85°C	82	90	98	
				T_A = +25°C	74	82	90	
				T_A = -40°C	68	76	84	
Device-to-Device Propagation-Delay Matching		$\lvert V_{ID}\rvert$ = 3V, Figure 2, matched conditions					16	ns
Propagation-Delay Skew (t_{PLH} - t_{PHL})	t_{SK}					-4	±10	ns
Output Enable Time to Low Level	t_{ZL}	Figure 3				600	800	ns
Output Enable Time to High Level	t_{ZH}	Figure 3				600	800	ns
Output Disable Time from Low Level	t_{LZ}	Figure 3				60	100	ns
Output Disable Time from High Level	t_{HZ}	Figure 3				60	100	ns
Maximum Data Rate	f_{MAX}				10			Mbps

DC ELECTRICAL CHARACTERISTICS—MAX3096

(V_{CC} = 3.0V to 3.6V, T_A = T_{MIN} to T_{MAX}, unless otherwise noted. Typical values are at V_{CC} = 3.3V, T_A = +25°C.) (Note 1)

PARAMETER	SYMBOL	CONDITIONS		MIN	TYP	MAX	UNITS
Receiver Differential Input Threshold	V_{TH}	-7V ≤ V_{CM} ≤ 12V		-200		200	mV
Receiver Input Hysteresis		V_{CM} = 0			45		mV
Receiver Input Current (A_, B_)	I_{IN}	V_{CC} = 0 or 3.6V	V_{IN} = 12V			250	µA
			V_{IN} = -7V			-200	
Enable Input Current (G, $\overline{G}$)						±1	µA
Enable Input High Voltage (G, $\overline{G}$)	V_{IH}			2.0			V
Enable Input Low Voltage (G, $\overline{G}$)	V_{IL}					0.8	V
Receiver Output High Voltage	V_{OH}	I_{OUT} = -1.5mA, V_{ID} = 200mV, G = V_{CC} or $\overline{G}$ = GND, Figure 1		V_{CC} - 0.4			V
Receiver Output Low Voltage	V_{OL}	I_{OUT} = 2.5mA, V_{ID} = -200mV, G = V_{CC} or $\overline{G}$ = GND, Figure 1				0.4	V
Three-State Current at Receiver Output	I_{OZR}	0 ≤ V_{OUT} ≤ V_{CC}, G = GND and $\overline{G}$ = V_{CC}				±1	µA
Output Short-Circuit Current	I_{OSR}	0 ≤ V_{OUT} ≤ V_{CC}, G = V_{CC} or $\overline{G}$ = GND		±4		±60	mA
Receiver Input Resistance	R_{IN}	-7V ≤ V_{CM} ≤ 12V		48			kΩ

±15kV ESD-Protected, 10Mbps, 3V/5V, Quad RS-422/RS-485 Receivers

DC ELECTRICAL CHARACTERISTICS—MAX3096 (continued)

(V_{CC} = 3.0V to 3.6V, T_A = T_{MIN} to T_{MAX}, unless otherwise noted. Typical values are at V_{CC} = 3.3V, T_A = +25°C.) (Note 1)

PARAMETER	SYMBOL	CONDITIONS	MIN	TYP	MAX	UNITS
Supply Current	I_{CC}	No load, G = V_{CC} or $\overline{G}$ = GND		2.4	4.0	mA
		G = GND and $\overline{G}$ = V_{CC}		0.001	10	µA
ESD Protection (Note 2)		Human Body Model		±15		kV
		IEC1000-4-2 (Air-Gap Discharge)		±15		
		IEC1000-4-2 (Contact Discharge)		±8		

SWITCHING CHARACTERISTICS—MAX3096

(V_{CC} = 3.0V to 3.6V, T_A = T_{MIN} to T_{MAX}, unless otherwise noted. Typical values are at T_A = +25°C.)

PARAMETER	SYMBOL	CONDITIONS			MIN	TYP	MAX	UNITS
Input-to-Output Propagation Delay	t_{PLH}, t_{PHL}	V_{CC} = 3.0V to 3.6V, T_A = T_{MIN} to T_{MAX}			69		123	ns
		$\lvert V_{ID}\rvert$ = 3V, Figure 2	V_{CC} = 3.60V	T_A = +85°C	88	98	108	
				T_A = +25°C	78	88	98	
				T_A = -40°C	69	79	89	
			V_{CC} = 3.00V	T_A = +85°C	103	113	123	
				T_A = +25°C	91	101	111	
				T_A = -40°C	82	92	102	
Device-to-Device Propagation-Delay Matching		$\lvert V_{ID}\rvert$ = 3V, Figure 2, matched conditions					20	ns
Propagation-Delay Skew (t_{PLH} - t_{PHL})	t_{SK}					-2	±10	ns
Output Enable Time to Low Level	t_{ZL}	Figure 3				600	1000	ns
Output Enable Time to High Level	t_{ZH}	Figure 3				600	1000	ns
Output Disable Time from Low Level	t_{LZ}	Figure 3				80	180	ns
Output Disable Time from High Level	t_{HZ}	Figure 3				80	180	ns
Maximum Data Rate	f_{MAX}				10			Mbps

Note 1: All currents into the device are positive; all currents out of the device are negative. All voltages are referred to device ground, unless otherwise noted.

Note 2: Receiver inputs (A_, B_).

Typical Operating Characteristics

(V_{CC} = 5V for MAX3095, V_{CC} = 3.3V for MAX3096, T_A = +25°C, unless otherwise noted.)

OUTPUT CURRENT vs. OUTPUT LOW VOLTAGE

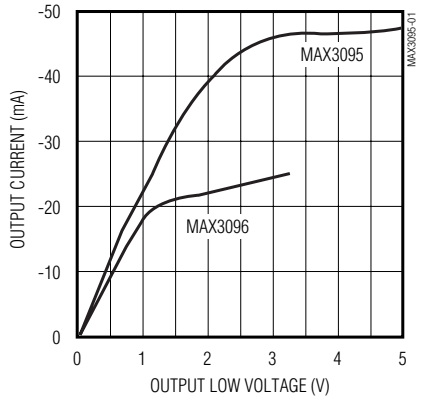

OUTPUT CURRENT vs. OUTPUT HIGH VOLTAGE

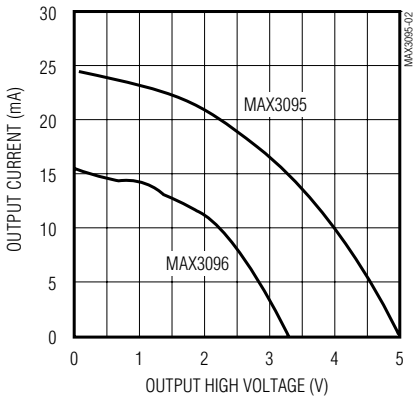

OUTPUT LOW VOLTAGE vs. TEMPERATURE

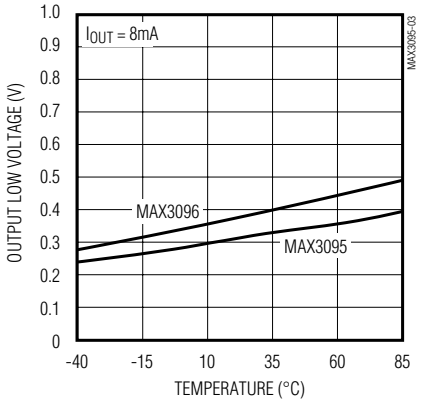

OUTPUT HIGH VOLTAGE vs. TEMPERATURE

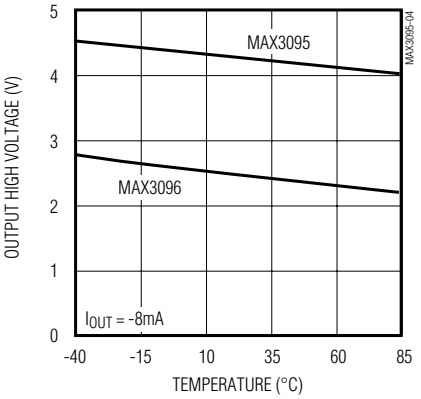

SUPPLY CURRENT vs. TEMPERATURE

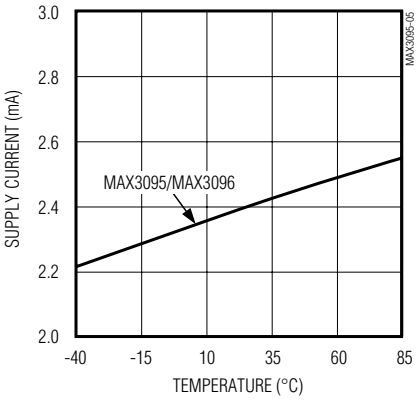

SHUTDOWN SUPPLY CURRENT vs. TEMPERATURE

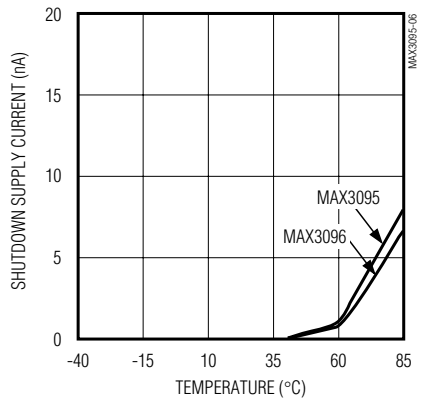

MAX3095 PROPAGATION DELAY vs. TEMPERATURE

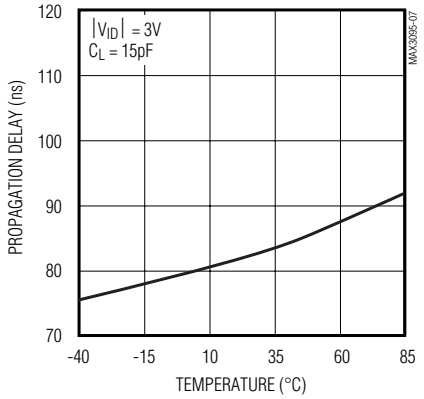

MAX3096 PROPAGATION DELAY vs. TEMPERATURE

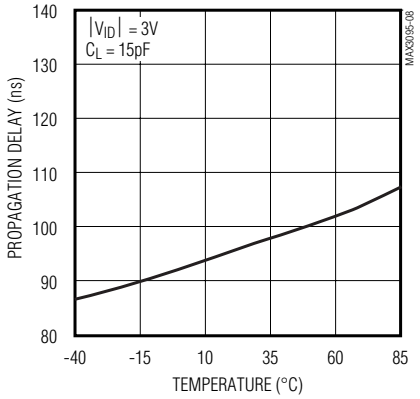

±15kV ESD-Protected, 10Mbps, 3V/5V, Quad RS-422/RS-485 Receivers

Typical Operating Characteristics (continued)

(V_{CC} = 5V for MAX3095, V_{CC} = 3.3V for MAX3096, T_A = +25°C, unless otherwise noted.)

SHUTDOWN TIMING

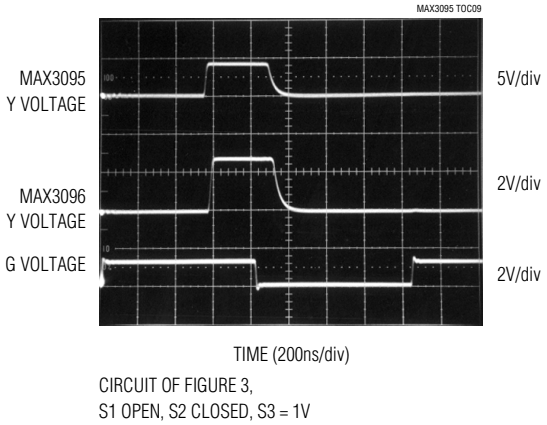

CIRCUIT OF FIGURE 3,
S1 OPEN, S2 CLOSED, S3 = 1V

Pin Description

PIN	NAME	FUNCTION
1	B1	Inverting Receiver Input
2	A1	Noninverting Receiver Input
3	Y1	Receiver Output. Enabled when G = high OR $\overline{G}$ = low. Y1 will be logic high if A1 > B1 by 200mV, and low if A1 < B1 by 200mV. It will be logic high if A1 and B1 remain floating. Otherwise, the state is undetermined. Y1 goes high impedance when the G = low *and* $\overline{G}$ = high.
4	G	Receiver Output Enable High. A logic high on this input enables all receivers. When taken low and $\overline{G}$ is high, all receivers are shut down, and the outputs go high impedance.
5	Y2	Receiver Output. Same functionality as Y1.
6	A2	Noninverting Receiver Input
7	B2	Inverting Receiver Input
8	GND	Ground
9	B3	Inverting Receiver Input
10	A3	Noninverting Receiver Input
11	Y3	Receiver Output. Same functionality as Y1.
12	$\overline{G}$	Receiver Output Enable Low. A logic low on this pin enables all receivers. When $\overline{G}$ = high and G = low, all receivers are shut down, and the outputs go high impedance.
13	Y4	Receiver Output. Same functionality as Y1.
14	A4	Noninverting Receiver Input
15	B4	Inverting Receiver Input
16	V_{CC}	Positive Supply

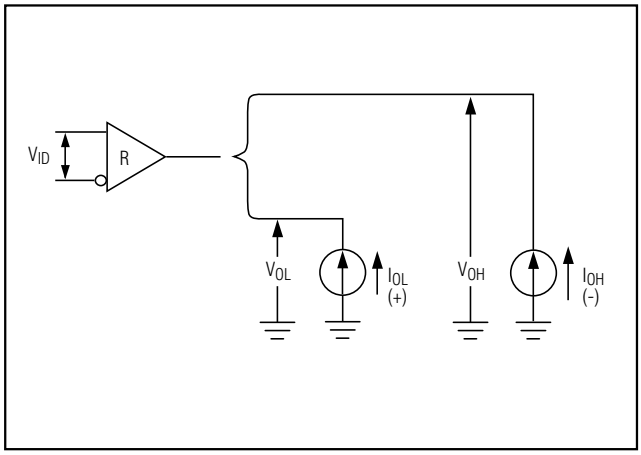

Figure 1. Receiver V_{OH} and V_{OL}

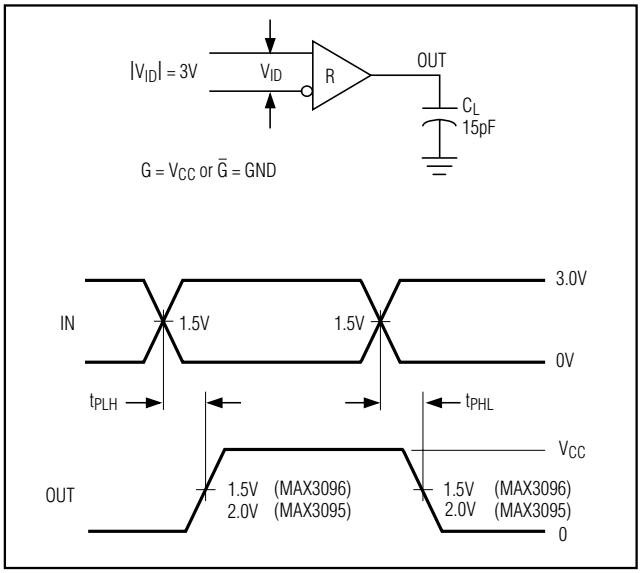

Figure 2. Receiver Propagation Delay

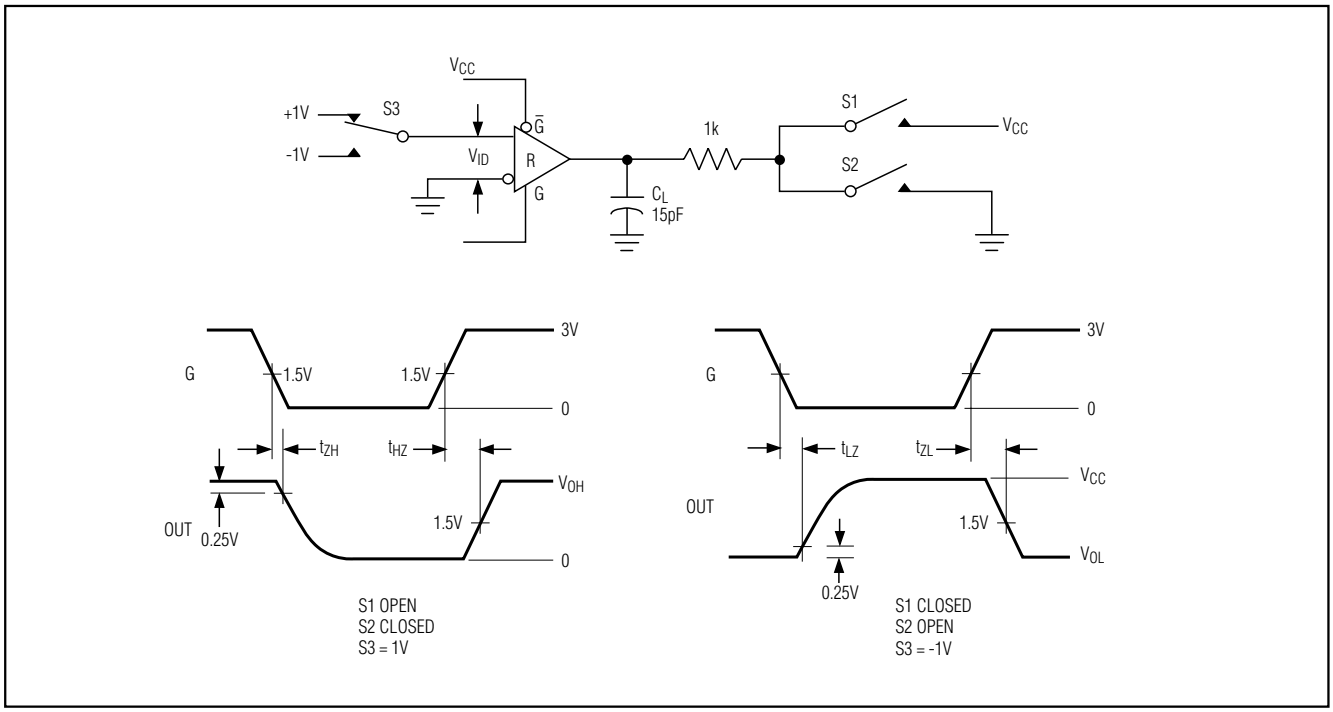

Figure 3. Receiver Enable and Disable Times

±15kV ESD-Protected, 10Mbps, 3V/5V, Quad RS-422/RS-485 Receivers

Detailed Description

±15kV ESD Protection

As with all Maxim devices, ESD-protection structures are incorporated on all pins to protect against electrostatic discharges (ESD) encountered during handling and assembly. The MAX3095/MAX3096 receiver inputs have extra protection against static electricity found in normal operation. Maxim's engineers developed state-of-the-art structures to protect these pins against ±15kV ESD, without damage. After an ESD event, the MAX3095/MAX3096 continue working without latchup.

ESD protection can be tested in several ways. The receiver inputs are characterized for protection to the following:

1) ±15kV using the Human Body Model
2) ±8kV using the Contact-Discharge Method specified in IEC 1000-4-2 (formerly IEC 801-2)
3) ±15kV using the Air-Gap Method specified in IEC 1000-4-2 (formerly IEC 801-2)

ESD Test Conditions

ESD performance depends on a number of conditions. Contact Maxim for a reliability report that documents test setup, methodology, and results.

Human Body Model

Figure 4a shows the Human Body Model, and Figure 4b shows the current waveform it generates when discharged into a low impedance. This model consists of a 100pF capacitor charged to the ESD voltage of interest, which is then discharged into the device through a 1.5kΩ resistor.

IEC 1000-4-2

Since January 1996, all equipment manufactured and/or sold in the European community has been required to meet the stringent IEC 1000-4-2 specification. The IEC 1000-4-2 standard covers ESD testing and performance of finished equipment; it does not specifically refer to integrated circuits. The MAX3095/MAX3096 help you design equipment that meets Level 4 (the highest level) of IEC 1000-4-2, without additional ESD-protection components.

The main difference between tests done using the Human Body Model and IEC 1000-4-2 is higher peak current in IEC 1000-4-2. Because series resistance is lower in the IEC 1000-4-2 ESD test model (Figure 5a), the ESD-withstand voltage measured to this standard is generally lower than that measured using the Human Body Model. Figure 5b shows the current waveform for the ±8kV IEC 1000-4-2 Level 4 ESD Contact-Discharge test. The Air-Gap test involves approaching the device with a charge probe. The Contact-Discharge method connects the probe to the device before the probe is energized.

Machine Model

The Machine Model for ESD testing uses a 200pF storage capacitor and zero-discharge resistance. It mimics the stress caused by handling during manufacturing and assembly. Of course, all pins (not just RS-485 inputs) require this protection during manufacturing. Therefore, the Machine Model is less relevant to the I/O ports than are the Human Body Model and IEC 1000-4-2.

Low-Power Shutdown Mode

Table 1 shows the functionality of the enable inputs. The MAX3095/MAX3096 enter shutdown when G is low and $\overline{G}$ is high. In shutdown, all outputs go high impedance and the devices typically draw less than 1nA. The devices exit shutdown by taking G high or $\overline{G}$ low. The typical shutdown exit time is 600ns.

Table 1. Function Table

G	$\overline{G}$	(A - B)	OUTPUT Y	DEVICE MODE
1	X	≥ 200mV	1	On
1	X	≤ -200mV	0	On
1	X	Open	1	On
X	0	≥ 200mV	1	On
X	0	≤ -200mV	0	On
X	0	Open	1	On
0	1	X	High-Z	Shutdown

X = don't care, High-Z = high impedance

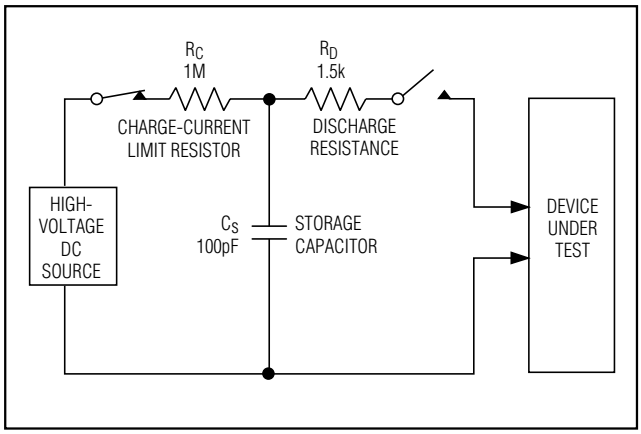

Figure 4a. Human Body ESD Test Model

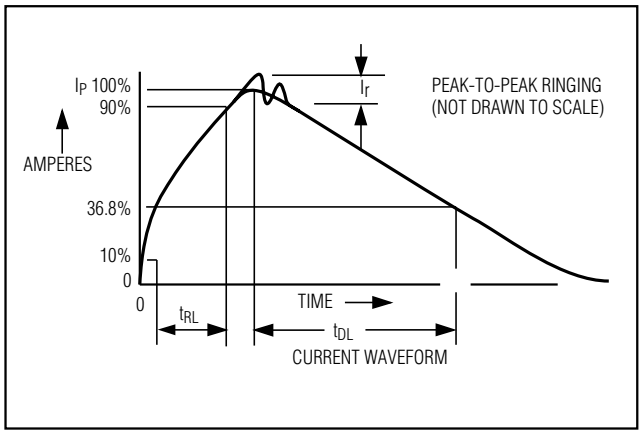

Figure 4b. Human Body Model Current Waveform

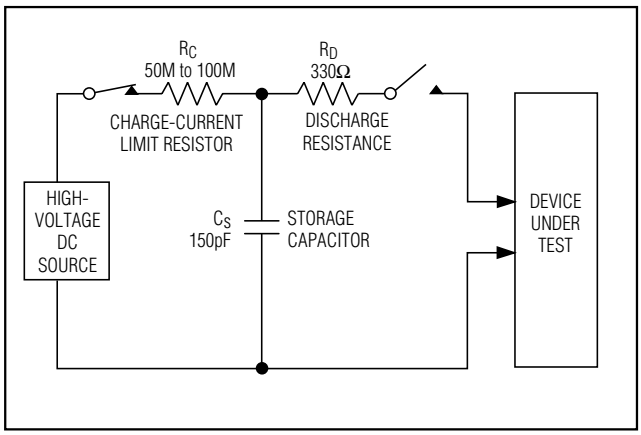

Figure 5a. IEC 1000-4-2 ESD Test Model

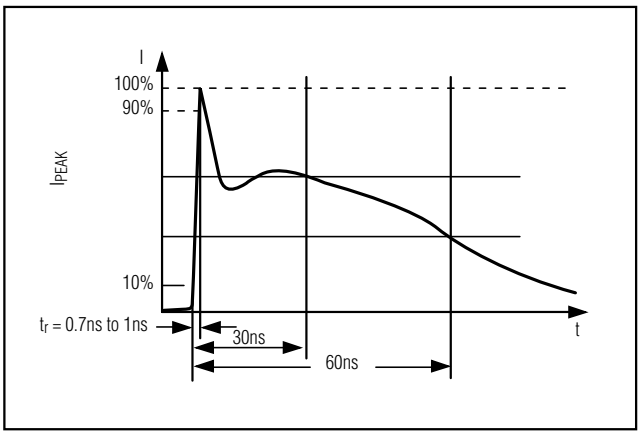

Figure 5b. IEC 1000-4-2 ESD-Generator Current Waveform

±15kV ESD-Protected, 10Mbps, 3V/5V, Quad RS-422/RS-485 Receivers

Applications Information

Propagation-Delay Matching

The MAX3095/MAX3096 exhibit propagation delays that are closely matched from one device to another, even between devices from different production lots. This feature allows multiple data lines to receive data and clock signals with minimal skewing with respect to each other. The MAX3095 receiver propagation delays are trimmed to a predetermined value ±8ns, while the MAX3096 delays are trimmed to a predetermined value ±10ns.

128 Receivers on the Bus

The standard RS-485 input impedance is 12kΩ (one-unit load). The standard RS-485 transmitter can drive 32 unit loads. The MAX3095/MAX3096 present a 1/4-unit-load input impedance (48kΩ), which allows up to 128 receivers on a bus. Any combination of these RS-485 receivers with a total of 32 unit loads can be connected to the same bus.

Fail-Safe Implementation

The MAX3095/MAX3096 receiver inputs guarantee a logic high output when the inputs are open circuit (no termination resistor used). This occurs when the transmitter is removed from the bus or when all transmitter outputs are high impedance. However, when the line is terminated and the transmitters are disabled, the differential voltage between the A and B inputs falls below the ±200mV RS-485 sensitivity threshold. Consequently, the outputs become undefined. To maintain a fail-safe receiver output while using a terminating resistor, input A must be biased at least 200mV above input B. The resistor-divider network shown in Figure 6 is recommended.

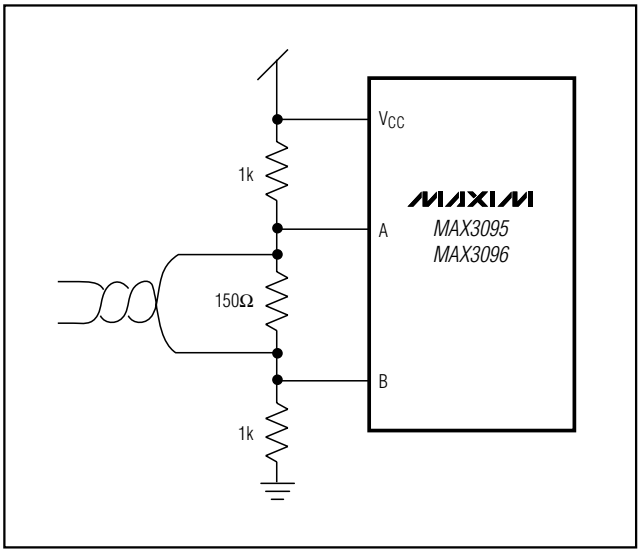

Figure 6. External Fail-Safe Implementation

Chip Information

TRANSISTOR COUNT: 676

Package Information

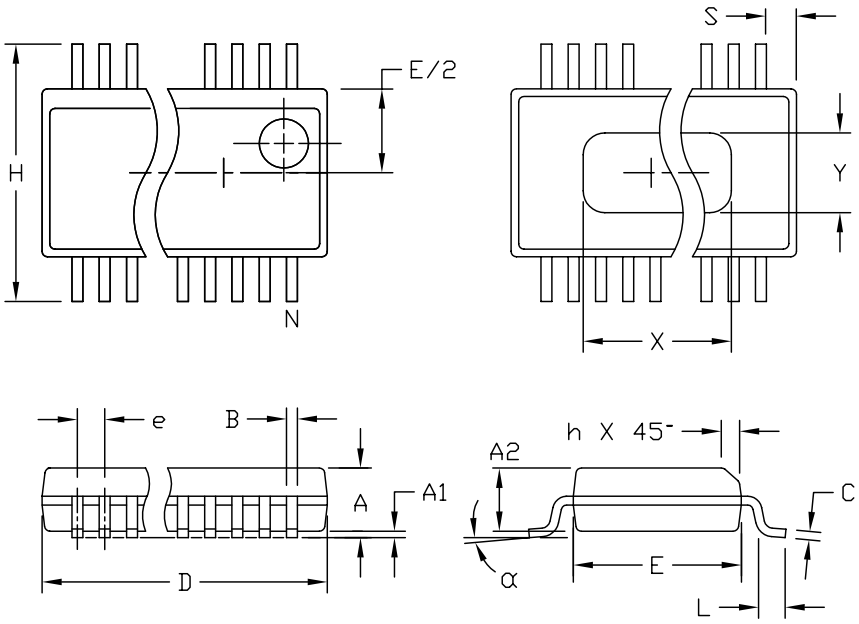

QSOP.EPS

DIM	INCHES MIN	INCHES MAX	MILLIMETERS MIN	MILLIMETERS MAX
A	.061	.068	1.55	1.73
A1	.004	.0098	0.102	0.249
A2	.055	.061	1.40	1.55
B	.008	.012	0.20	0.31
C	.0075	.0098	0.191	0.249
D	SEE VARIATIONS			
E	.150	.157	3.81	3.99
e	.025 BSC		0.635 BSC	
H	.230	.244	5.84	6.20
h	.010	.016	0.25	0.41
L	.016	.035	0.41	0.89
N	SEE VARIATIONS			
X	SEE VARIATIONS			
Y	.071	.087	1.803	2.209
α	0°	8°	0°	8°

VARIATIONS:

	INCHES MIN.	INCHES MAX.	MILLIMETERS MIN.	MILLIMETERS MAX.	N	
D	.189	.196	4.80	4.98	16	AA
S	.0020	.0070	0.05	0.18		
X	.107	.123	2.72	3.12		
D	.337	.344	8.56	8.74	20	AB
S	.0500	.0550	1.270	1.397		
D	.337	.344	8.56	8.74	24	AC
S	.0250	.0300	0.635	0.762		
D	.386	.393	9.80	9.98	28	AD
S	.0250	.0300	0.635	0.762		
X	.271	.287	6.88	7.29		

NOTES:
1. D & E DO NOT INCLUDE MOLD FLASH OR PROTRUSIONS.
2. MOLD FLASH OR PROTRUSIONS NOT TO EXCEED .006″ PER SIDE.
3. HEAT SLUG DIMENSIONS X AND Y APPLY ONLY TO 16 AND 28 LEAD POWER-QSOP PACKAGES.
4. CONTROLLING DIMENSIONS: INCHES.
5. MEETS JEDEC MO137.

MAXIM

PROPRIETARY INFORMATION

TITLE: PACKAGE OUTLINE, QSOP, .150″, .025″ LEAD PITCH

APPROVAL	DOCUMENT CONTROL NO.	REV	
	21-0055	C	1/1

±15kV ESD-Protected, 10Mbps, 3V/5V, Quad RS-422/RS-485 Receivers

Package Information (continued)

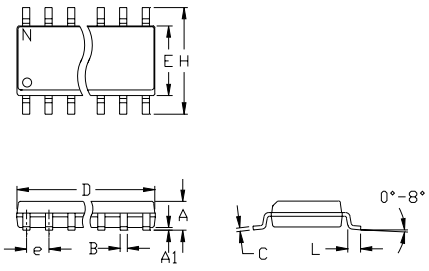

	INCHES		MILLIMETERS	
	MIN	MAX	MIN	MAX
A	0.053	0.069	1.35	1.75
A1	0.004	0.010	0.10	0.25
B	0.014	0.019	0.35	0.49
C	0.007	0.010	0.19	0.25
e	0.050		1.27	
E	0.150	0.157	3.80	4.00
H	0.228	0.244	5.80	6.20
h	0.010	0.020	0.25	0.50
L	0.016	0.050	0.40	1.27

	INCHES		MILLIMETERS			
	MIN	MAX	MIN	MAX	N	MS012
D	0.189	0.197	4.80	5.00	8	A
D	0.337	0.344	8.55	8.75	14	B
D	0.386	0.394	9.80	10.00	16	C

NOTES:
1. D&E DO NOT INCLUDE MOLD FLASH
2. MOLD FLASH OR PROTRUSIONS NOT TO EXCEED .15mm (.006")
3. LEADS TO BE COPLANAR WITHIN .102mm (.004")
4. CONTROLLING DIMENSION: MILLIMETER
5. MEETS JEDEC MS012-XX AS SHOWN IN ABOVE TABLE
6. N = NUMBER OF PINS

MAXIM | PACKAGE FAMILY OUTLINE: SOIC .150" (TITLE) | 1/1 | 21-0041 A (DOCUMENT CONTROL NUMBER, REV)

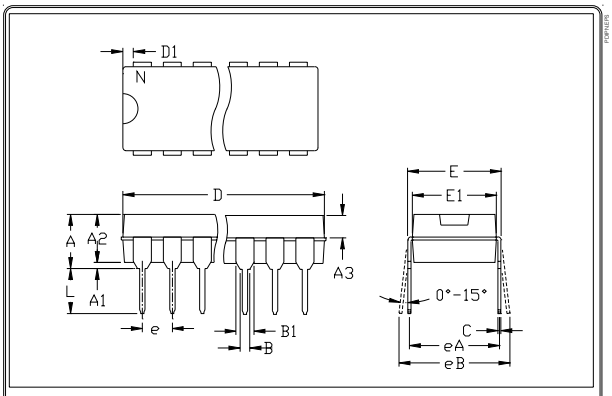

	INCHES		MILLIMETERS	
	MIN	MAX	MIN	MAX
A	---	0.200	---	5.08
A1	0.015	---	0.38	---
A2	0.125	0.175	3.18	4.45
A3	0.055	0.080	1.40	2.03
B	0.016	0.022	0.41	0.56
B1	0.045	0.065	1.14	1.65
C	0.008	0.012	0.20	0.30
D1	0.005	0.080	0.13	2.03
E	0.300	0.325	7.62	8.26
E1	0.240	0.310	6.10	7.87
e	0.100	---	2.54	---
eA	0.300	---	7.62	---
eB	---	0.400	---	10.16
L	0.115	0.150	2.92	3.81

	INCHES		MILLIMETERS			
	MIN	MAX	MIN	MAX	N	MS001
D	0.348	0.390	8.84	9.91	8	AB
D	0.735	0.765	18.67	19.43	14	AC
D	0.745	0.765	18.92	19.43	16	AA
D	0.885	0.915	22.48	23.24	18	AD
D	1.015	1.045	25.78	26.54	20	AE
D	1.14	1.265	28.96	32.13	24	AF
D	1.360	1.380	34.54	35.05	28	*5

NOTES:
1. D&E DO NOT INCLUDE MOLD FLASH
2. MOLD FLASH OR PROTRUSIONS NOT TO EXCEED .15mm (.006")
3. CONTROLLING DIMENSION: MILLIMETER
4. MEETS JEDEC MS001-XX AS SHOWN IN ABOVE TABLE
5. SIMILIAR TO JEDEC MO-058AB
6. N = NUMBER OF PINS

MAXIM | PACKAGE FAMILY OUTLINE: PDIP .300" (TITLE) | 1/1 | 21-0043 A (DOCUMENT CONTROL NUMBER, REV)

Maxim cannot assume responsibility for use of any circuitry other than circuitry entirely embodied in a Maxim product. No circuit patent licenses are implied. Maxim reserves the right to change the circuitry and specifications without notice at any time.

© 2000 Maxim Integrated Products Printed USA MAXIM is a registered trademark of Maxim Integrated Products.