19-2365; Rev 1; 1/04

1Ω, Low-Voltage, Quad 2:1 Analog Multiplexers

General Description

The MAX4780/MAX4784 are low on-resistance, low-voltage, quad 2:1 analog multiplexers that operate from a single +1.6V to +3.6V supply. These devices have fast switching speeds (t_{ON} = 20ns, t_{OFF} = 18ns, max), handle Rail-to-Rail® analog signals, and consume less than 1µW of quiescent power.

When powered from a +2.7V supply, the MAX4780/MAX4784 feature low 0.7Ω on-resistance (R_{ON}), and 0.1Ω R_{ON} flatness. The digital logic input is +1.8V CMOS-logic compatible when using a single +3V supply.

The MAX4780/MAX4784 are available in 16-pin TSSOP and 3mm x 3mm thin QFN packages.

Applications

Power Routing

Battery-Powered Systems

Audio and Video Signal Routing

Low-Voltage Data-Acquisition Systems

Communications Circuits

PCMCIA Cards

Cellular Phones

Modems

Hard Drives

Features

- **Low R_{ON}**
  0.7Ω (+2.7V Supply)
  2Ω (+1.8V Supply)
- **0.1Ω (max) R_{ON} Flatness (+2.7V Supply)**
- **+1.6V to +3.6V Single-Supply Operation**
- **3mm x 3mm Thin QFN Package**
- **High-Current-Handling Capacity (150mA Continuous)**
- **+1.8V CMOS Logic Compatible**
- **Fast Switching: t_{ON} = 20ns, t_{OFF} = 18ns**

Ordering Information

PART	TEMP RANGE	PIN-PACKAGE
MAX4780ETE	-40°C to +85°C	16 Thin QFN
MAX4780EUE	-40°C to +85°C	16 TSSOP
MAX4784ETE	-40°C to +85°C	16 Thin QFN
MAX4784EUE	-40°C to +85°C	16 TSSOP

Pin Configurations/Functional Diagrams/Truth Tables

TOP VIEW

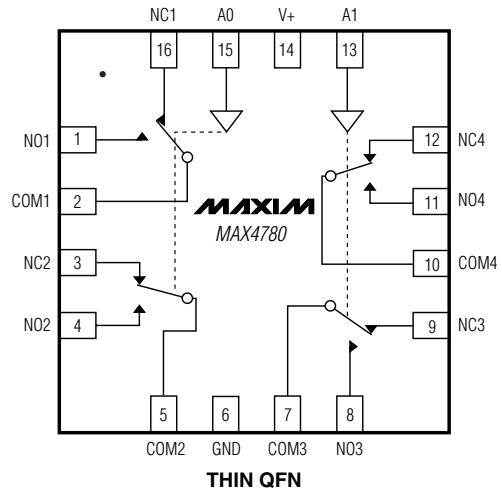

THIN QFN

MAX4780	
A0	**ON SWITCH**
0	NC1, NC2
1	NO1, NO2
A1	**ON SWITCH**
0	NC3, NC4
1	NO3, NO4

MAX4784		
$\overline{EN}$	**A0**	**ON SWITCH**
1	X	NONE
0	0	COM1-NC1 COM2-NC2 COM3-NC3 COM4-NC4
0	1	COM1-NO1 COM2-NO2 COM3-NO3 COM4-NO4

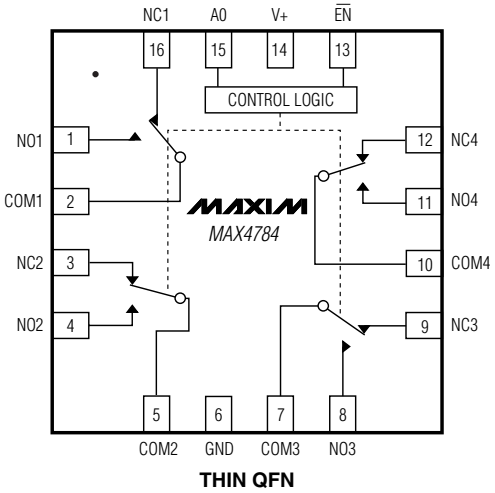

THIN QFN

Pin Configurations/Functional Diagrams/Truth Tables continued at end of data sheet.

Rail-to-Rail is a registered trademark of Nippon Motorola, Ltd.

ABSOLUTE MAXIMUM RATINGS

Voltages Referenced to GND
- V+, A_, $\overline{EN}$ .....-0.3V to +4V
- COM_, NO_, NC_ (Note 1) .....-0.3V to (V+ + 0.3V)

Continuous Current COM_ , NO_, NC_ .....±150mA
Peak Current COM_, NO_, NC_
- (pulsed at 1ms 10% duty cycle).....±300mA

Continuous Power Dissipation (T_A = +70°C)
- 16-Pin Thin QFN (derate 14.7mW/°C above +70°C).....1176.5mW
- 16-Pin TSSOP (derate 9.4mW/°C above +70°C) 755mW

Operating Temperature Range .....-40°C to +85°C
Maximum Junction Temperature .....+150°C
Storage Temperature Range .....-65°C to +150°C

Note 1: Signals on COM_, NO_, or NC_ exceeding V+ or GND are clamped by internal diodes. Limit forward current to maximum current rating.

Stresses beyond those listed under "Absolute Maximum Ratings" may cause permanent damage to the device. These are stress ratings only, and functional operation of the device at these or any other conditions beyond those indicated in the operational sections of the specifications is not implied. Exposure to absolute maximum rating conditions for extended periods may affect device reliability.

ELECTRICAL CHARACTERISTICS—Single +3V Supply

(V+ = +2.7V to +3.6V, V_{IH} = +1.4V, V_{IL} = +0.5V, T_A = T_{MIN} to T_{MAX}, unless otherwise specified. Typical values are at V+ = +3.0V, T_A = +25°C.) (Notes 2, 3)

PARAMETER	SYMBOL	CONDITIONS	T_A	MIN	TYP	MAX	UNITS
ANALOG SWITCH							
Analog Signal Range	$V_{COM\_}$, $V_{NO\_}$, $V_{NC\_}$			0		V+	V
On-Resistance (Note 4)	R_{ON}	V+ = 2.7V, $I_{COM\_}$ = 100mA, $V_{NO\_}$ or $V_{NC\_}$ = 1.5V	+25°C		0.7	1	Ω
			T_{MIN} to T_{MAX}			1.2	
On-Resistance Match Between Channels (Notes 4, 5)	ΔR_{ON}	V+ = 2.7V, $I_{COM\_}$ = 100mA, $V_{NO\_}$ or $V_{NC\_}$ = 1.5V	+25°C		0.1	0.15	Ω
			T_{MIN} to T_{MAX}			0.2	
On-Resistance Flatness (Note 6)	$R_{FLAT(ON)}$	V+ = 2.7V, $I_{COM\_}$ = 100mA, $V_{NO\_}$ or $V_{NC\_}$ = 1V, 1.5V, 2V	+25°C		0.1	0.2	Ω
			T_{MIN} to T_{MAX}			0.3	
NO_ or NC_ Off-Leakage Current (Note 7)	$I_{NO\_(OFF)}$, $I_{NC\_(OFF)}$	V+ = 3.6V, $V_{COM\_}$ = 0.3V, 3.3V, $V_{NO\_}$ or $V_{NC\_}$ = 3.3V, 0.3V	+25°C	-1	±0.002	+1	nA
			T_{MIN} to T_{MAX}	-5		+5	
COM_ Off-Leakage Current (MAX4784 Only) (Note 7)	$I_{COM\_(OFF)}$	V+ = 3.6V, $V_{COM\_}$ = 0.3V, 3.3V, $V_{NO\_}$ or $V_{NC\_}$ = 3.3V, 0.3V, or floating	+25°C	-1	±0.002	+1	nA
			T_{MIN} to T_{MAX}	-5		+5	
COM_ On-Leakage Current (Note 7)	$I_{COM\_(ON)}$	V+ = 3.6V, $V_{COM\_}$ = 3.3V, 0.3V, $V_{NO\_}$ or $V_{NC\_}$ = 3.3V, 0.3V, or floating	+25°C	-2	±0.002	+2	nA
			T_{MIN} to T_{MAX}	-10		+10	

ELECTRICAL CHARACTERISTICS—Single +3V Supply (continued)

($V+$ = +2.7V to +3.6V, V_{IH} = +1.4V, V_{IL} = +0.5V, T_A = T_{MIN} to T_{MAX}, unless otherwise specified. Typical values are at $V+$ = +3.0V, T_A = +25°C.) (Notes 2, 3)

PARAMETER	SYMBOL	CONDITIONS	T_A	MIN	TYP	MAX	UNITS
SWITCH DYNAMIC CHARACTERISTICS							
Turn-On Time	t_{ON}	$V_{NO\_}$, $V_{NC\_}$ = 1.5V, R_L = 50Ω, C_L = 35pF, Figure 1	+25°C		20	25	ns
			T_{MIN} to T_{MAX}			30	
Turn-Off Time	t_{OFF}	$V_{NO\_}$, $V_{NC\_}$ = 1.5V, R_L = 50Ω, C_L = 35pF, Figure 1	+25°C		8	10	ns
			T_{MIN} to T_{MAX}			18	
Break-Before-Make (Note 8)	t_{BBM}	$V_{NO\_}$, $V_{NC\_}$ = 1.5V, R_L = 50Ω, C_L = 35pF, Figure 2	+25°C		7		ns
			T_{MIN} to T_{MAX}	1			
Charge Injection	Q	V_{GEN} = 0, R_{GEN} = 0, C_L = 1.0nF, Figure 3	+25°C		5		pC
NO_ or NC_ Off-Capacitance	C_{OFF}	f = 1MHz, Figure 4	+25°C		33		pF
COM_ Off-Capacitance	$C_{COM\_(OFF)}$	f = 1MHz, Figure 4	+25°C		60		pF
COM_ On-Capacitance	$C_{COM\_(ON)}$	f = 1MHz, Figure 4	+25°C		85		pF
-3dB On-Channel Bandwidth	BW	Signal = 0, R_{IN} = R_{OUT} = 50Ω, C_L = 5pF, Figure 5			123		MHz
Off-Isolation (Note 9)	V_{ISO}	f = 1MHz, $V_{COM\_}$ = $1V_{P-P}$, R_L = 50Ω, C_L = 5pF, Figure 5	+25°C		-67		dB
Crosstalk (Note 10)	V_{CT}	f = 1MHz, $V_{COM\_}$ = $1V_{P-P}$, R_L = 50Ω, C_L = 5pF, Figures 4, 5	+25°C		-95		dB
Total Harmonic Distortion	THD	f = 20Hz to 20kHz, $V_{COM\_}$ = $2V_{P-P}$, R_L = 32Ω	+25°C		0.008		%
LOGIC INPUT (A_, $\overline{EN}$)							
Input Logic High	V_{IH}			1.4			V
Input Logic Low	V_{IL}					0.5	V
Input Leakage Current	I_{IN}	$V_{\overline{EN}}$ = 0 or +3.6V, V_{A0} = 0 or +3.6V		-1	0.005	+1	µA
POWER SUPPLY							
Power-Supply Range	V+			1.6		3.6	V
Positive Supply Current	I+	V+ = 3.6V, $\overline{EN}$, A0 = 0 or V+, all channels on or off	T_{MIN} to T_{MAX}			2	µA

ELECTRICAL CHARACTERISTICS—Single +1.8V Supply

($V+$ = +1.8V, V_{IH} = +1.0V, V_{IL} = +0.4V, T_A = T_{MIN} to T_{MAX}, unless otherwise specified. Typical values are at T_A = +25°C.) (Notes 2, 3)

PARAMETER	SYMBOL	CONDITIONS	T_A	MIN	TYP	MAX	UNITS
ANALOG SWITCH							
Analog Signal Range	$V_{COM\_}$, $V_{NO\_}$, $V_{NC\_}$			0		V+	V
On-Resistance	R_{ON}	$I_{COM\_}$ = 10mA, $V_{NO\_}$ or $V_{NC\_}$ = 1.0V	+25°C		2	3	Ω
			T_{MIN} to T_{MAX}			5	
NO_ or NC_ Off-Leakage Current (Note 7)	$I_{NO\_(OFF)}$, $I_{NC\_(OFF)}$	$V_{COM\_}$ = 0.3V, 1.5V, $V_{NO\_}$ or $V_{NC\_}$ = 1.5V, 0.3V	+25°C	-1		+1	nA
			T_{MIN} to T_{MAX}	-5		+5	
COM_ Off-Leakage Current (MAX4784 Only) (Note 7)	$I_{COM\_(OFF)}$	$V_{COM\_}$ = 0.3V, 1.5V, $V_{NO\_}$ or $V_{NC\_}$ = 1.5V, 0.3V	+25°C	-1		+1	nA
			T_{MIN} to T_{MAX}	-5		+5	
COM_ On-Leakage Current (Note 7)	$I_{COM\_(ON)}$	$V_{COM\_}$ = 0.3V, 1.5V, $V_{NO\_}$ or $V_{NC\_}$ = 0.3V, 1.5V, or floating	+25°C	-2		+2	nA
			T_{MIN} to T_{MAX}	-10		+10	
SWITCH DYNAMIC CHARACTERISTICS							
Turn-On Time	t_{ON}	$V_{NO\_}$, $V_{NC\_}$ = 1.0V, R_L = 50Ω, C_L = 35pF, Figure 1	+25°C		25	30	ns
			T_{MIN} to T_{MAX}			35	
Turn-Off Time	t_{OFF}	$V_{NO\_}$, $V_{NC\_}$ = 1.0V, R_L = 50Ω, C_L = 35pF, Figure 1	+25°C		10	15	ns
			T_{MIN} to T_{MAX}			20	
Break-Before-Make (Note 8)	t_{BBM}	$V_{NO\_}$, $V_{NC\_}$ = 1.0V, R_L = 50Ω, C_L = 35pF, Figure 2	+25°C		10		ns
			T_{MIN} to T_{MAX}	1			
Charge Injection	Q	V_{GEN} = 0, R_{GEN} = 0, C_L = 1nF, Figure 3	+25°C		5		pC

ELECTRICAL CHARACTERISTICS—Single +1.8V Supply (continued)

($V+$ = +1.8V, V_{IH} = +1.0V, V_{IL} = +0.4V, T_A = T_{MIN} to T_{MAX}, unless otherwise specified. Typical values are at T_A = +25°C.) (Notes 2, 3)

PARAMETER	SYMBOL	CONDITIONS	T_A	MIN	TYP	MAX	UNITS
LOGIC INPUT (A_, $\overline{EN}$)							
Input Logic High	V_{IH}			1			V
Input Logic Low	V_{IL}					0.4	V
Input Leakage Current	I_{IN}	$V_{\overline{EN}}$ = 0 or +3.6V, V_{A0} = 0 or +3.6V		-1		+1	µA

Note 2: The algebraic convention, where the most negative value is a minimum and the most positive value is a maximum, is used in this data sheet.
Note 3: -40°C specifications are guaranteed by design.
Note 4: R_{ON} and ΔR_{ON} matching specifications for QFN packaged parts are guaranteed by design.
Note 5: $\Delta R_{ON} = R_{ON(MAX)} - R_{ON(MIN)}$.
Note 6: Flatness is defined as the difference between the maximum and the minimum value of on-resistance as measured over the specified analog signal ranges.
Note 7: Leakage parameters are 100% tested at T_A = +85°C, and guaranteed by correlation over the full rated temperature range.
Note 8: Guaranteed by design.
Note 9: Off-isolation = $20\log_{10}(V_{COM\_}/V_{NO\_})$, $V_{COM\_}$ = output, $V_{NO\_}$ = input to off switch.
Note 10: Between two switches.

Typical Operating Characteristics

(T_A = +25°C, unless otherwise noted.)

ON-RESISTANCE vs. V_{COM}

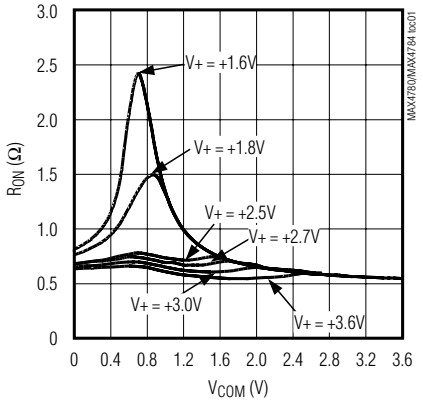

ON-RESISTANCE vs. V_{COM} AND TEMPERATURE

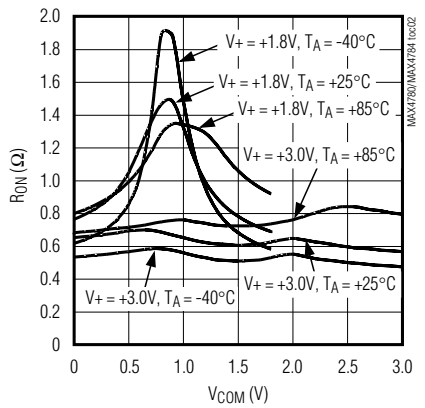

ON/OFF-LEAKAGE CURRENT vs. TEMPERATURE

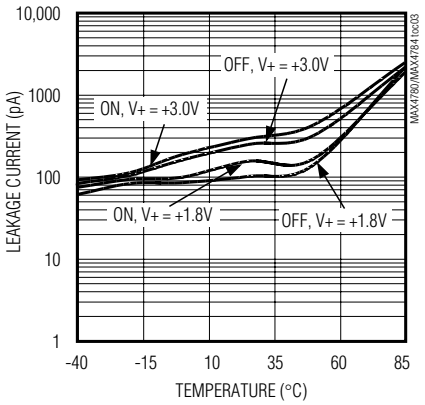

Typical Operating Characteristics (continued)

(T_A = +25°C, unless otherwise noted.)

CHARGE INJECTION vs. V_{COM}

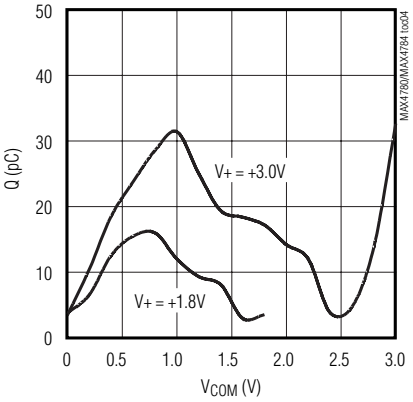

SUPPLY CURRENT vs. SUPPLY VOLTAGE AND TEMPERATURE

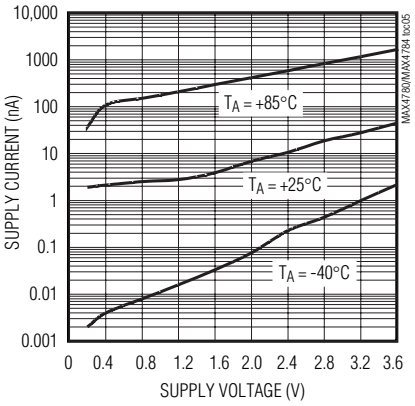

LOGIC-LEVEL THRESHOLD vs. SUPPLY VOLTAGE

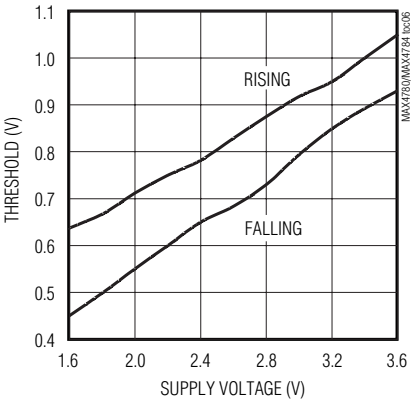

TURN-ON/OFF TIME vs. SUPPLY VOLTAGE

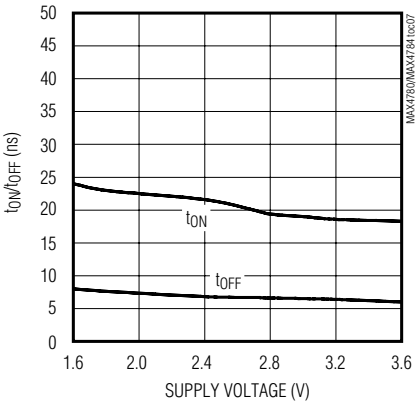

TURN-ON/OFF TIMES vs. TEMPERATURE

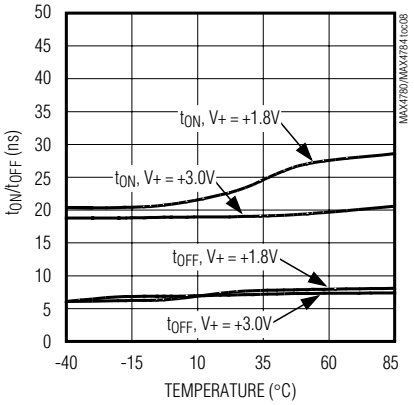

FREQUENCY RESPONSE

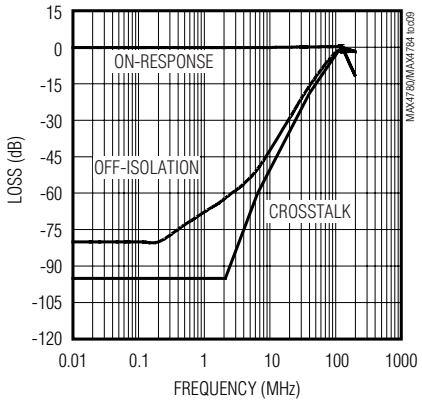

TOTAL HARMONIC DISTORTION vs. FREQUENCY

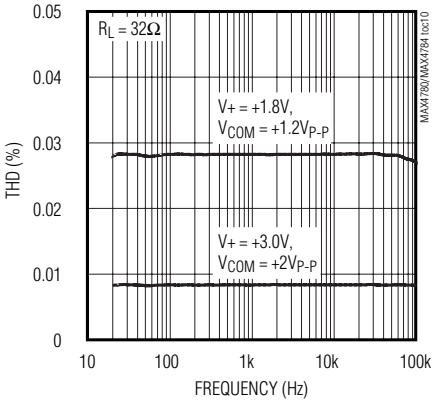

Pin Description

PIN				NAME	FUNCTION
MAX4780		MAX4784			
TSSOP	THIN QFN	TSSOP	THIN QFN		
1	15	1	15	A0	Address Input
2	16	2	16	NC1	Normally Closed Terminal
3	1	3	1	NO1	Normally Open Terminal
4	2	4	2	COM1	Analog Switch Common Terminal
5	3	5	3	NC2	Normally Closed Terminal
6	4	6	4	NO2	Normally Open Terminal
7	5	7	5	COM2	Analog Switch Common Terminal
8	6	8	6	GND	Ground
9	7	9	7	COM3	Analog Switch Common Terminal
10	8	10	8	NO3	Normally Open Terminal
11	9	11	9	NC3	Normally Closed Terminal
12	10	12	10	COM4	Analog Switch Common Terminal
13	11	13	11	NO4	Normally Open Terminal
14	12	14	12	NC4	Normally Closed Terminal
15	13	—	—	A1	Address Input
—	—	15	13	$\overline{EN}$	Enable. Connect to GND for normal operation. Connect to logic-level high to turn all switches off.
16	14	16	14	V+	Positive Supply Voltage

Detailed Description

The MAX4780/MAX4784 are low 0.7Ω (at V+ = +2.7V) on-resistance, low-voltage, quad 2:1 analog multiplexers/demultiplexers that operate from a +1.6V to +3.6V single supply. CMOS switch construction allows switching analog signals that are within the supply voltage range (GND to V+).

When powered from a +2.7V supply, the 0.7Ω R_{ON} allows high continuous currents to be switched in a variety of applications.

Applications Information

Proper power-supply sequencing is recommended for all CMOS devices. Do not exceed the absolute maximum ratings, because stresses beyond the listed ratings can cause permanent damage to the devices. Always sequence V+ on first, followed by NO_, NC_, or COM_.

Although it is not required, power-supply bypassing improves noise margin and prevents switching noise propagation from the V+ supply to other components. A 0.1µF capacitor, connected from V+ to GND, is adequate for most applications.

Logic Inputs

The MAX4780/MAX4784 logic inputs can be driven up to +3.6V regardless of the supply voltage. For example, with a +1.8V supply, A_ and $\overline{EN}$ may be driven low to GND and high to +3.6V. Driving A_ and $\overline{EN}$ rail-to-rail minimizes power consumption. Drive $\overline{EN}$ low to enable the COM_ outputs. When $\overline{EN}$ is high, the COM_ outputs are high impedance.

Analog Signal Levels

Analog signals that range over the entire supply voltage (V+ to GND) can be passed with very little change in on-resistance (see the *Typical Operating Characteristics*). The switches are bidirectional, so the NO_, NC_, and COM_ pins can be used as either inputs or outputs.

Layout

High-speed switches require proper layout and design procedures for optimum performance. Reduce stray inductance and capacitance by keeping traces short and wide. Ensure that bypass capacitors are as close to the device as possible. Use large ground planes where possible.

Test Circuits/Timing Diagrams

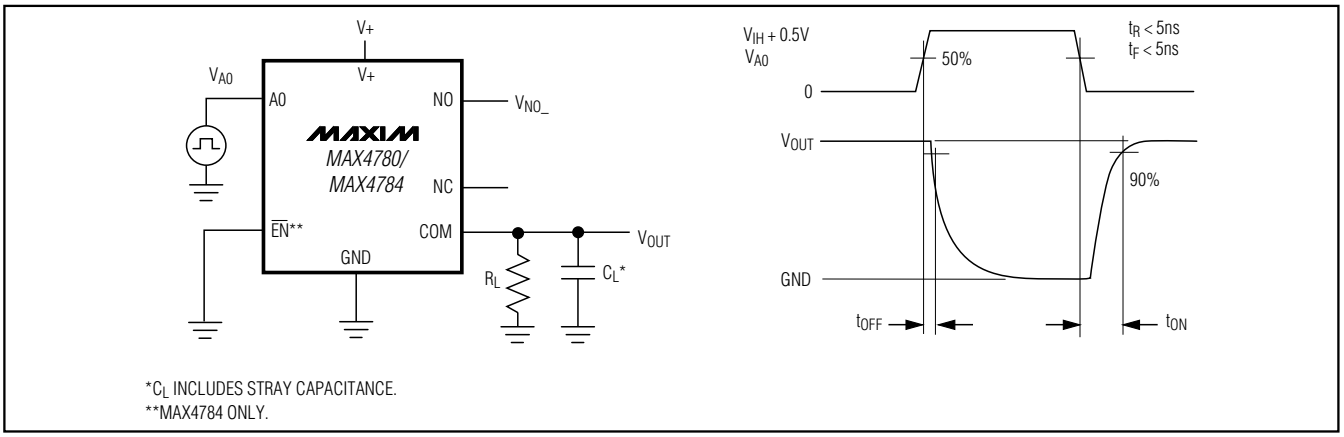

Figure 1. Turn-On and Turn-Off Times

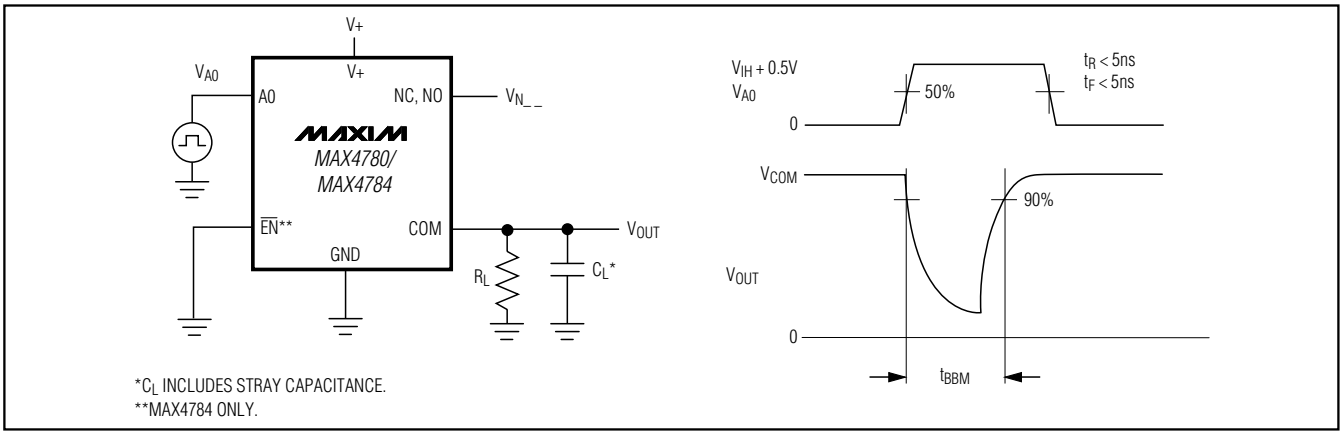

Figure 2. Break-Before-Make Interval

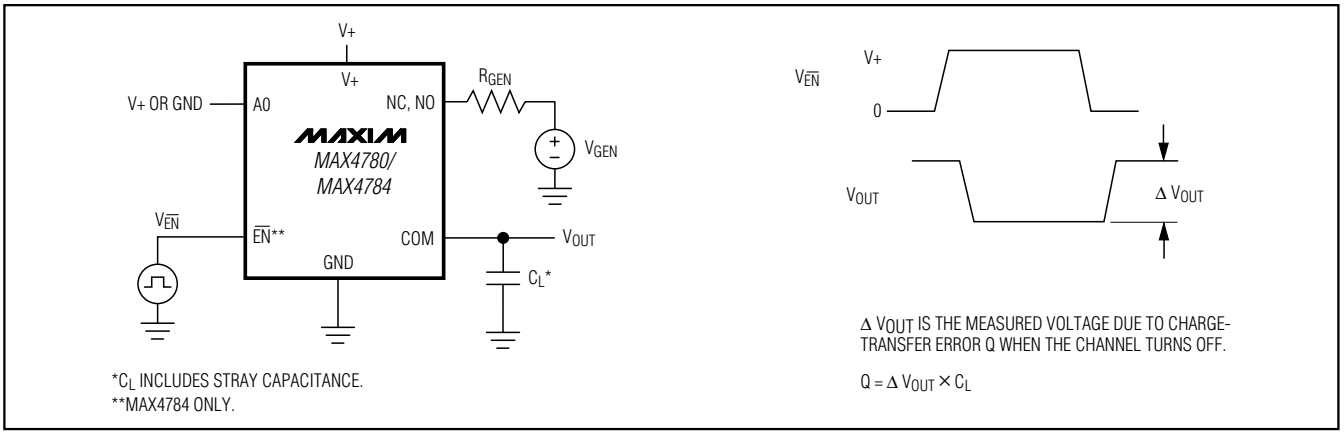

Figure 3. Charge Injection

Test Circuits/Timing Diagrams (continued)

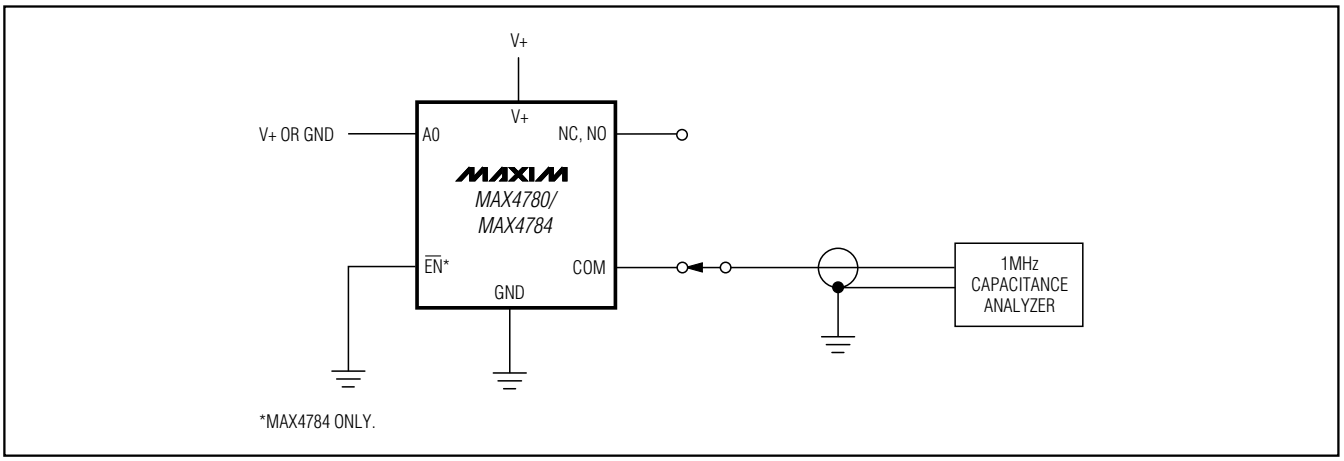

Figure 4. Capacitance

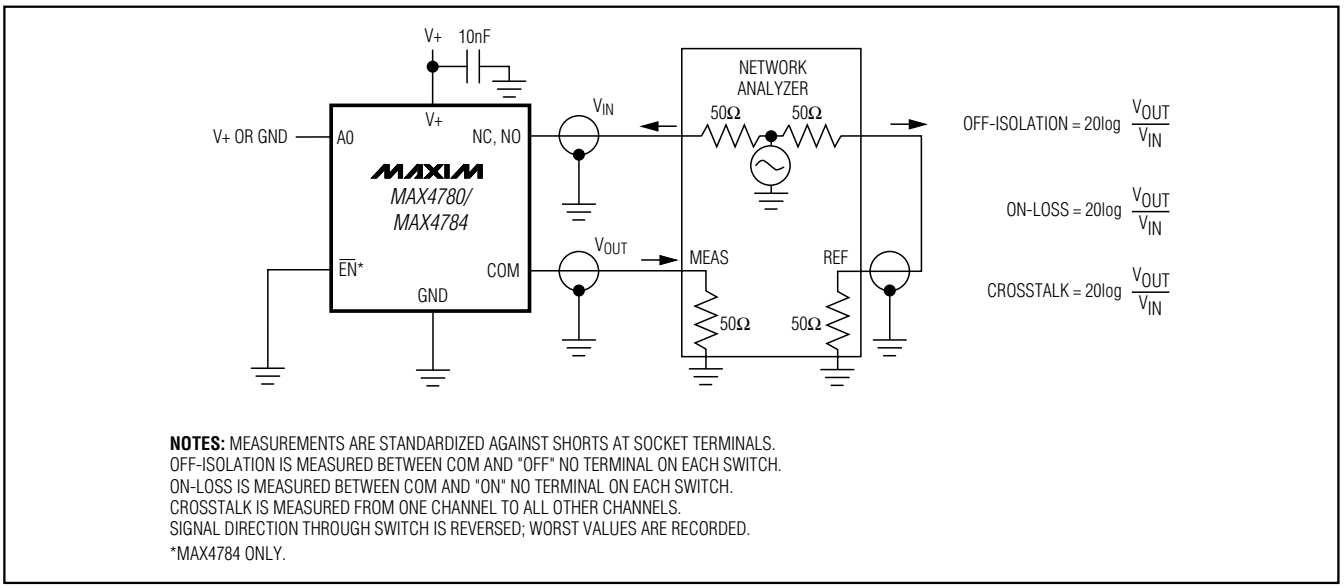

Figure 5. Off-Isolation, On-Loss, and Crosstalk

Pin Configurations/Functional Diagrams/Truth Tables (continued)

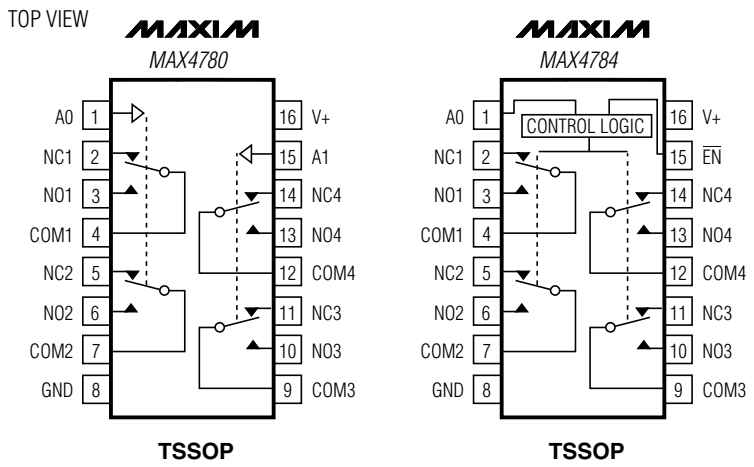

Chip Information

TRANSISTOR COUNT: 543

PROCESS: CMOS

Package Information

(The package drawing(s) in this data sheet may not reflect the most current specifications. For the latest package outline information, go to **www.maxim-ic.com/packages**.)

TSSOP4.40mm.EPS

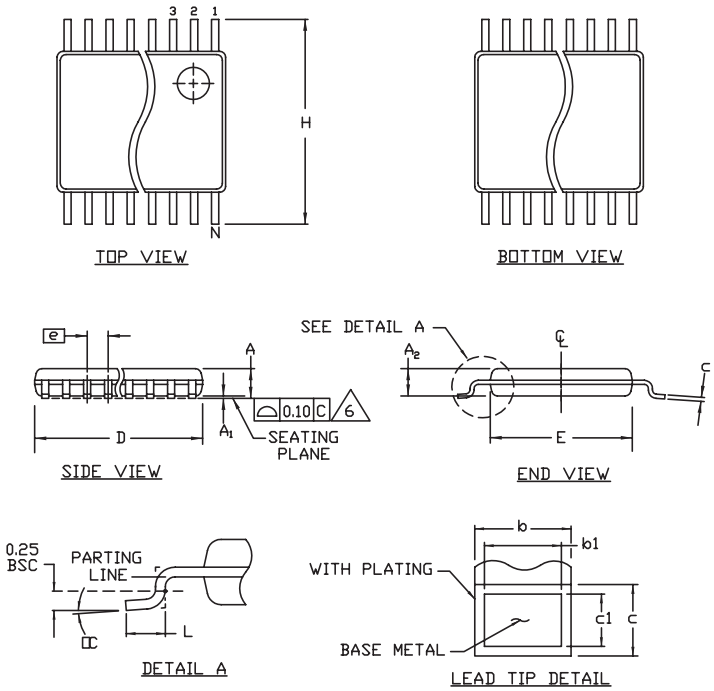

SYMBOL	COMMON DIMENSIONS			
	MILLIMETERS		INCHES	
	MIN.	MAX.	MIN.	MAX.
A	——	1.10		.043
A_1	0.05	0.15	.002	.006
A_2	0.85	0.95	.033	.037
b	0.19	0.30	.007	.012
b_1	0.19	0.25	.007	.010
c	0.09	0.20	.004	.008
c_1	0.09	0.14	.004	.006
D	SEE VARIATIONS		SEE VARIATIONS	
E	4.30	4.50	.169	.177
e	0.65 BSC		.026 BSC	
H	6.25	6.55	.246	.258
L	0.50	0.70	.020	.028
N	SEE VARIATIONS		SEE VARIATIONS	
α	0°	8°	0°	8°

JEDEC			VARIATIONS			
MO-153	N		MILLIMETERS		INCHES	
			MIN.	MAX.	MIN.	MAX.
AB-1	14	D	4.90	5.10	.193	.201
AB	16	D	4.90	5.10	.193	.201
AC	20	D	6.40	6.60	.252	.260
AD	24	D	7.70	7.90	.303	.311
AE	28	D	9.60	9.80	.378	.386

NOTES:
1. DIMENSIONS D AND E DO NOT INCLUDE FLASH
2. MOLD FLASH OR PROTRUSIONS NOT TO EXCEED 0.15mm PER SIDE
3. CONTROLLING DIMENSION: MILLIMETER
4. MEETS JEDEC OUTLINE MO-153. SEE JEDEC VARIATIONS TABLE
5. "N" REFERS TO NUMBER OF LEADS
6. THE LEAD TIPS MUST LIE WITHIN A SPECIFIED ZONE. THIS TOLERANCE ZONE IS DEFINED BY TWO PARALLEL PLANES. ONE PLANE IS THE SEATING PLANE, DATUM [-C-]; THE OTHER PLANE IS AT THE SPECIFIED DISTANCE FROM [-C-] IN THE DIRECTION INDICATED

DALLAS SEMICONDUCTOR MAXIM

PROPRIETARY INFORMATION

TITLE: PACKAGE OUTLINE, TSSOP 4.40mm BODY

APPROVAL	DOCUMENT CONTROL NO.	REV.	
	21-0066	F	1/1

Package Information (continued)

(The package drawing(s) in this data sheet may not reflect the most current specifications. For the latest package outline information, go to **www.maxim-ic.com/packages**.)

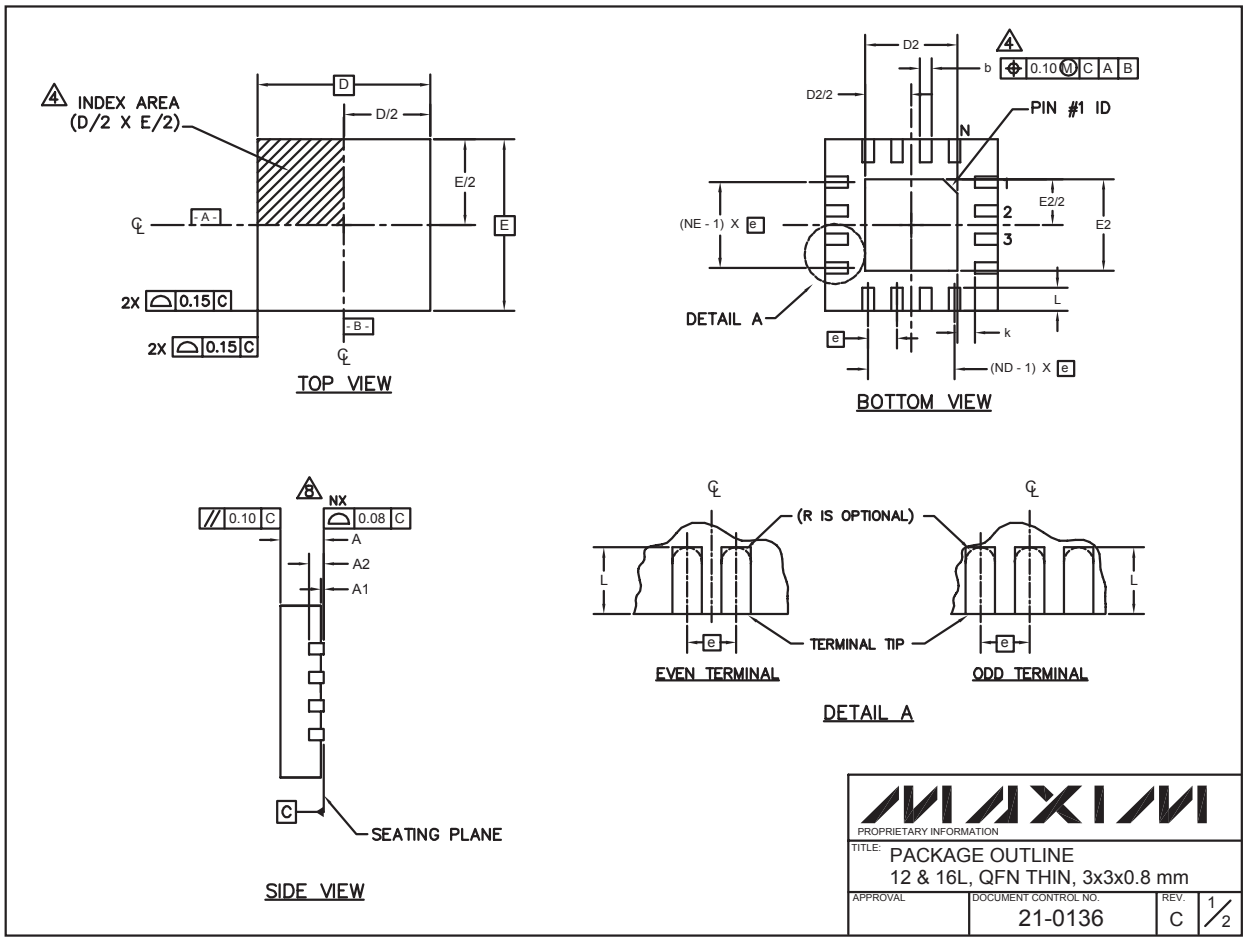

Package Information (continued)

(The package drawing(s) in this data sheet may not reflect the most current specifications. For the latest package outline information, go to **www.maxim-ic.com/packages**.)

PKG	12L 3x3			16L 3x3		
REF.	MIN.	NOM.	MAX.	MIN.	NOM.	MAX.
A	0.70	0.75	0.80	0.70	0.75	0.80
b	0.20	0.25	0.30	0.20	0.25	0.30
D	2.90	3.00	3.10	2.90	3.00	3.10
E	2.90	3.00	3.10	2.90	3.00	3.10
e	0.50 BSC.			0.50 BSC.		
L	0.45	0.55	0.65	0.30	0.40	0.50
N	12			16		
ND	3			4		
NE	3			4		
A1	0	0.02	0.05	0	0.02	0.05
A2	0.20 REF			0.20 REF		
k	0.25	-	-	0.25	-	-

EXPOSED PAD VARIATIONS								
PKG. CODES	D2			E2			PIN ID	JEDEC
	MIN.	NOM.	MAX.	MIN.	NOM.	MAX.		
T1233-1	0.95	1.10	1.25	0.95	1.10	1.25	0.35 x 45°	WEED-1
T1633-1	0.95	1.10	1.25	0.95	1.10	1.25	0.35 x 45°	WEED-2
T1633F-3	0.65	0.80	0.95	0.65	0.80	0.95	0.225 x 45°	-

NOTES:

1. DIMENSIONING & TOLERANCING CONFORM TO ASME Y14.5M-1994.
2. ALL DIMENSIONS ARE IN MILLIMETERS. ANGLES ARE IN DEGREES.
3. N IS THE TOTAL NUMBER OF TERMINALS.
4. THE TERMINAL #1 IDENTIFIER AND TERMINAL NUMBERING CONVENTION SHALL CONFORM TO JESD 95-1 SPP-012. DETAILS OF TERMINAL #1 IDENTIFIER ARE OPTIONAL, BUT MUST BE LOCATED WITHIN THE ZONE INDICATED. THE TERMINAL #1 IDENTIFIER MAY BE EITHER A MOLD OR MARKED FEATURE.
5. DIMENSION b APPLIES TO METALLIZED TERMINAL AND IS MEASURED BETWEEN 0.20 mm AND 0.25 mm FROM TERMINAL TIP.
6. ND AND NE REFER TO THE NUMBER OF TERMINALS ON EACH D AND E SIDE RESPECTIVELY.
7. DEPOPULATION IS POSSIBLE IN A SYMMETRICAL FASHION.
8. COPLANARITY APPLIES TO THE EXPOSED HEAT SINK SLUG AS WELL AS THE TERMINALS.
9. DRAWING CONFORMS TO JEDEC MO220 REVISION C.

MAXIM

PROPRIETARY INFORMATION

TITLE: PACKAGE OUTLINE 12 & 16L, QFN THIN, 3x3x0.8 mm

APPROVAL	DOCUMENT CONTROL NO.	REV.	
	21-0136	C	2/2