LM2594/LM2594HV SIMPLE SWITCHER® Power Converter 150 kHz 0.5A Step-Down Voltage Regulator

Check for Samples: LM2594, LM2594HV

FEATURES

- **3.3V, 5V, 12V, and Adjustable Output Versions**
- **Adjustable Version Output Voltage Range, 1.2V to 37V (57V for the HV Version)±4% Max Over Line and Load Conditions**
- **Available in 8-pin Surface Mount SOIC and PDIP-8 Package**
- **Ensured 0.5A Output Current**
- **Input Voltage Range up to 60V**
- **Requires only 4 External Components**
- **150 kHz Fixed Frequency Internal Oscillator**
- **TTL Shutdown Capability**
- **Low Power Standby Mode, I_Q typically 85 μA**
- **High Efficiency**
- **Uses Readily Available Standard Inductors**
- **Thermal Shutdown and Current Limit Protection**

APPLICATIONS

- **Simple High-efficiency Step-down (Buck) Regulator**
- **Efficient Pre-regulator for Linear Regulators**
- **On-card Switching Regulators**
- **Positive to Negative Convertor**

DESCRIPTION

The LM2594/LM2594HV series of regulators are monolithic integrated circuits that provide all the active functions for a step-down (buck) switching regulator, capable of driving a 0.5A load with excellent line and load regulation. These devices are available in fixed output voltages of 3.3V, 5V, 12V, and an adjustable output version, and are packaged in a 8-lead PDIP and a 8-lead surface mount SOIC package.

Requiring a minimum number of external components, these regulators are simple to use and feature internal frequency compensation†, a fixed-frequency oscillator, and improved line and load regulation specifications.

The LM2594/LM2594HV series operates at a switching frequency of 150 kHz thus allowing smaller sized filter components than what would be needed with lower frequency switching regulators. Because of its high efficiency, the copper traces on the printed circuit board are normally the only heat sinking needed.

A standard series of inductors (both through hole and surface mount types) are available from several different manufacturers optimized for use with the LM2594/LM2594HV series. This feature greatly simplifies the design of switch-mode power supplies.

Other features include an ensured ±4% tolerance on output voltage under all conditions of input voltage and output load conditions, and ±15% on the oscillator frequency. External shutdown is included, featuring typically 85 μA standby current. Self protection features include a two stage frequency reducing current limit for the output switch and an over temperature shutdown for complete protection under fault conditions.

The LM2594HV is for applications requiring an input voltage up to 60V.

Please be aware that an important notice concerning availability, standard warranty, and use in critical applications of Texas Instruments semiconductor products and disclaimers thereto appears at the end of this data sheet.

Switchers Made Simple is a trademark of Texas Instruments.
SIMPLE SWITCHER is a registered trademark of Texas Instruments.
Switchers Made Simple is a registered trademark of dcl_owner.
All other trademarks are the property of their respective owners.

PRODUCTION DATA information is current as of publication date. Products conform to specifications per the terms of the Texas Instruments standard warranty. Production processing does not necessarily include testing of all parameters.

Copyright © 1999–2013, Texas Instruments Incorporated

Typical Application

(Fixed Output Voltage Versions)

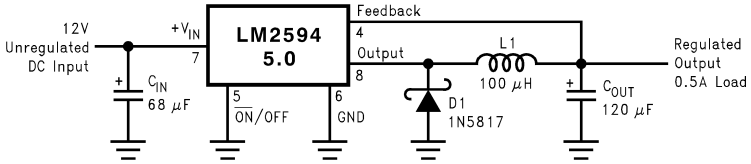

Connection Diagrams and Order Information

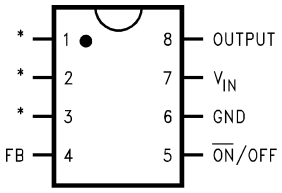

Figure 1. 8-Pin - Top View
See Package Number P0008E

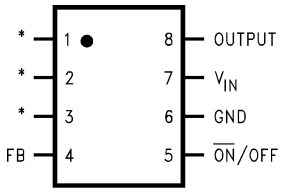

Figure 2. 8-Pin - Top View
See Package Number D0008A

*No internal connection, but should be soldered to pc board for best heat transfer.

‡Patent Number 5,382,918.

Copyright © 1999–2013, Texas Instruments Incorporated

These devices have limited built-in ESD protection. The leads should be shorted together or the device placed in conductive foam during storage or handling to prevent electrostatic damage to the MOS gates.

Absolute Maximum Ratings[1][2]

Maximum Supply Voltage		
LM2594		45V
LM2594HV		60V
$\overline{ON}$ /OFF Pin Input Voltage		−0.3 ≤ V ≤ +25V
Feedback Pin Voltage		−0.3 ≤ V ≤+25V
Output Voltage to Ground (Steady State)		−1V
Power Dissipation		Internally limited
Storage Temperature Range		−65°C to +150°C
ESD Susceptibility	Human Body Model[3]	2 kV
Lead Temperature		
D8 Package	Vapor Phase (60 sec.)	+215°C
	Infrared (15 sec.)	+220°C
P Package (Soldering, 10 sec.)		+260°C
Maximum Junction Temperature		+150°C

(1) Absolute Maximum Ratings indicate limits beyond which damage to the device may occur. Operating Ratings indicate conditions for which the device is intended to be functional, but do not ensure specific performance limits. For ensured specifications and test conditions, see the Electrical Characteristics.
(2) If Military/Aerospace specified devices are required, please contact the TI Sales Office/ Distributors for availability and specifications.
(3) The human body model is a 100 pF capacitor discharged through a 1.5k resistor into each pin.

Operating Conditions

Temperature Range	−40°C ≤ T_J +125°C
Supply Voltage	
LM2594	4.5V to 40V
LM2594HV	4.5V to 60V

LM2594/LM2594HV-3.3 Electrical Characteristics

Specifications with standard type face are for T_J = 25°C, and those with **boldface type** apply over **full Operating Temperature Range.** V_{INmax}= 40V for the LM2594 and 60V for the LM2594HV.

Symbol	Parameter	Conditions	LM2594/LM2594HV-3.3		Units (Limits)
			Typ[1]	Limit[2]	
SYSTEM PARAMETERS[3] Test Circuit Figure 20					
V_{OUT}	Output Voltage	4.75V ≤ V_{IN} ≤ V_{INmax}, 0.1A ≤ I_{LOAD} ≤ 0.5A	3.3	3.432/**3.465** 3.168/**3.135**	V V(min) V(max)
η	Efficiency	V_{IN} = 12V, I_{LOAD} = 0.5A	80		%

(1) Typical numbers are at 25°C and represent the most likely norm.
(2) All limits ensured at room temperature (standard type face) and at temperature extremes (bold type face). All room temperature limits are 100% production tested. All limits at temperature extremes are specified via correlation using standard Statistical Quality Control (SQC) methods. All limits are used to calculate Average Outgoing Quality Level (AOQL).
(3) External components such as the catch diode, inductor, input and output capacitors, and voltage programming resistors can affect switching regulator system performance. When the LM2594/LM2594HV is used as shown in the Figure 20 test circuit, system performance will be as shown in system parameters section of Electrical Characteristics.

Copyright © 1999–2013, Texas Instruments Incorporated

LM2594/LM2594HV-5.0 Electrical Characteristics

Specifications with standard type face are for T_J = 25°C, and those with **boldface type** apply over **full Operating Temperature Range**

Symbol	Parameter	Conditions	LM2594/LM2594HV-5.0		Units (Limits)
			Typ (1)	Limit (2)	
SYSTEM PARAMETERS (3) Test Circuit *Figure 20*					
V_{OUT}	Output Voltage	7V ≤ V_{IN} ≤ V_{INmax}, 0.1A ≤ I_{LOAD} ≤ 0.5A	5.0	4.800/**4.750** 5.200/**5.250**	V V(min) V(max)
η	Efficiency	V_{IN} = 12V, I_{LOAD} = 0.5A	82		%

(1) Typical numbers are at 25°C and represent the most likely norm.
(2) All limits ensured at room temperature (standard type face) and at temperature extremes (bold type face). All room temperature limits are 100% production tested. All limits at temperature extremes are specified via correlation using standard Statistical Quality Control (SQC) methods. All limits are used to calculate Average Outgoing Quality Level (AOQL).
(3) External components such as the catch diode, inductor, input and output capacitors, and voltage programming resistors can affect switching regulator system performance. When the LM2594/LM2594HV is used as shown in the Figure 20 test circuit, system performance will be as shown in system parameters section of Electrical Characteristics.

LM2594/LM2594HV-12 Electrical Characteristics

Specifications with standard type face are for T_J = 25°C, and those with **boldface type** apply over **full Operating Temperature Range**

Symbol	Parameter	Conditions	LM2594/LM2594HV-12		Units (Limits)
			Typ (1)	Limit (2)	
SYSTEM PARAMETERS (3) Test Circuit *Figure 20*					
V_{OUT}	Output Voltage	15V ≤ V_{IN} ≤ V_{INmax}, 0.1A ≤ I_{LOAD} ≤ 0.5A	12.0	11.52/**11.40** 12.48/**12.60**	V V(min) V(max)
η	Efficiency	V_{IN} = 25V, I_{LOAD} = 0.5A	88		%

(1) Typical numbers are at 25°C and represent the most likely norm.
(2) All limits ensured at room temperature (standard type face) and at temperature extremes (bold type face). All room temperature limits are 100% production tested. All limits at temperature extremes are specified via correlation using standard Statistical Quality Control (SQC) methods. All limits are used to calculate Average Outgoing Quality Level (AOQL).
(3) External components such as the catch diode, inductor, input and output capacitors, and voltage programming resistors can affect switching regulator system performance. When the LM2594/LM2594HV is used as shown in the Figure 20 test circuit, system performance will be as shown in system parameters section of Electrical Characteristics.

LM2594/LM2594HV-ADJ Electrical Characteristics

Specifications with standard type face are for T_J = 25°C, and those with **boldface type** apply over **full Operating Temperature Range**

Symbol	Parameter	Conditions	LM2594/LM2594HV-ADJ		Units (Limits)
			Typ (1)	Limit (2)	
SYSTEM PARAMETERS (3) Test Circuit *Figure 20*					
V_{FB}	Feedback Voltage	4.5V ≤ V_{IN} ≤ V_{INmax}, 0.1A ≤ I_{LOAD} ≤ 0.5A V_{OUT} programmed for 3V. Circuit of *Figure 20*	1.230	1.193/**1.180** 1.267/**1.280**	V V(min) V(max)
η	Efficiency	V_{IN} = 12V, I_{LOAD} = 0.5A	80		%

(1) Typical numbers are at 25°C and represent the most likely norm.
(2) All limits ensured at room temperature (standard type face) and at temperature extremes (bold type face). All room temperature limits are 100% production tested. All limits at temperature extremes are specified via correlation using standard Statistical Quality Control (SQC) methods. All limits are used to calculate Average Outgoing Quality Level (AOQL).
(3) External components such as the catch diode, inductor, input and output capacitors, and voltage programming resistors can affect switching regulator system performance. When the LM2594/LM2594HV is used as shown in the Figure 20 test circuit, system performance will be as shown in system parameters section of Electrical Characteristics.

Copyright © 1999–2013, Texas Instruments Incorporated

All Output Voltage Versions Electrical Characteristics

Specifications with standard type face are for T_J = 25°C, and those with **boldface type** apply over **full Operating Temperature Range** . Unless otherwise specified, V_{IN} = 12V for the 3.3V, 5V, and Adjustable version and V_{IN} = 24V for the 12V version. I_{LOAD} = 100 mA

Symbol	Parameter	Conditions	LM2594/LM2594HV-XX		Units (Limits)
			Typ (1)	Limit (2)	
DEVICE PARAMETERS					
I_b	Feedback Bias Current	Adjustable Version Only, VFB = 1.3V	10	50/**100**	nA
f_O	Oscillator Frequency	See (3)	150		kHz
				127/**110**	kHz(min)
				173/**173**	kHz(max)
V_{SAT}	Saturation Voltage	I_{OUT} = 0.5A (4) (5)	0.9		V
				1.1/**1.2**	V(max)
DC	Max Duty Cycle (ON)	See (5)	100		%
	Min Duty Cycle (OFF)	See (6)	0		
I_{CL}	Current Limit	Peak Current (4) (5)	0.8		A
				0.65/**0.58**	A(min)
				1.3/**1.4**	A(max)
I_L	Output Leakage Current	Output = 0V (4) (6) (7)		50	μA(max)
		Output = −1V	2		mA
				15	mA(max)
I_Q	Quiescent Current	See (6)	5		mA
				10	mA(max)
I_{STBY}	Standby Quiescent Current	ON/OFF pin = 5V (OFF) (7)	85		μA
		LM2594		200/**250**	μA(max)
		LM2594HV	140	250/**300**	μA(max)
θ_{JA}	Thermal Resistance	P Package, Junction to Ambient (8)	95		°C/W
		MDPackage, Junction to Ambient (8)	150		
ON/OFF CONTROL Test Circuit *Figure 20*					
	$\overline{ON}$ /OFF Pin Logic Input		1.3		V
V_{IH}	Threshold Voltage	Low (Regulator ON)		**0.6**	V(max)
V_{IL}		High (Regulator OFF)		**2.0**	V(min)
I_H	$\overline{ON}$ /OFF Pin Input Current	V_{LOGIC} = 2.5V (Regulator OFF)	5		μA
				15	μA(max)
I_L		V_{LOGIC} = 0.5V (Regulator ON)	0.02		μA
				5	μA(max)

(1) Typical numbers are at 25°C and represent the most likely norm.
(2) All limits ensured at room temperature (standard type face) and at temperature extremes (bold type face). All room temperature limits are 100% production tested. All limits at temperature extremes are specified via correlation using standard Statistical Quality Control (SQC) methods. All limits are used to calculate Average Outgoing Quality Level (AOQL).
(3) The switching frequency is reduced when the second stage current limit is activated. The amount of reduction is determined by the severity of current overload.
(4) No diode, inductor or capacitor connected to output pin.
(5) Feedback pin removed from output and connected to 0V to force the output transistor switch ON.
(6) Feedback pin removed from output and connected to 12V for the 3.3V, 5V, and the ADJ. version, and 15V for the 12V version, to force the output transistor switch OFF.
(7) V_{IN} = 40V for the LM2594 and 60V for the LM2594HV.
(8) Junction to ambient thermal resistance with approximately 1 square inch of printed circuit board copper surrounding the leads. Additional copper area will lower thermal resistance further. See application hints in this data sheet and the thermal model in Switchers Made Simple® software.

Copyright © 1999–2013, Texas Instruments Incorporated

Typical Performance Characteristics

Normalized Output Voltage

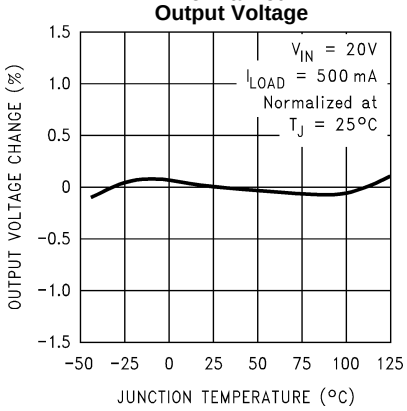

Figure 3.

Line Regulation

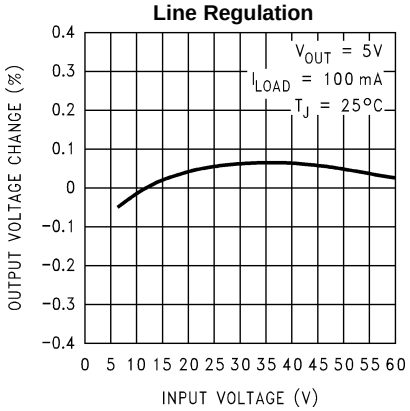

Figure 4.

Efficiency

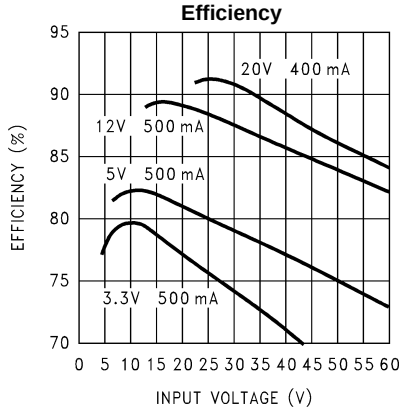

Figure 5.

Switch Saturation Voltage

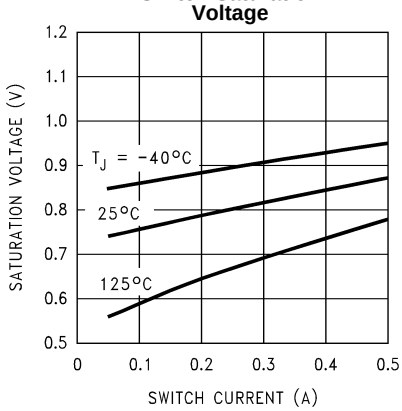

Figure 6.

Switch Current Limit

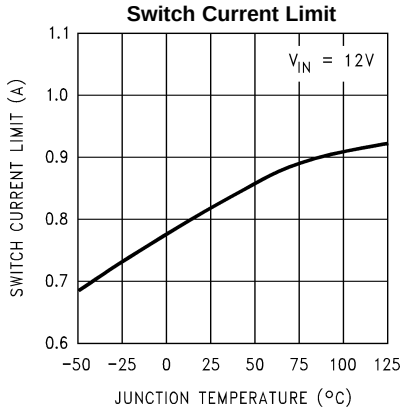

Figure 7.

Dropout Voltage

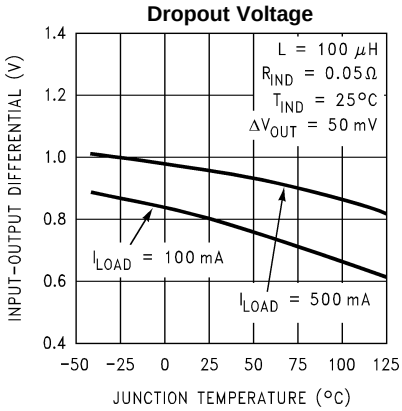

Figure 8.

Copyright © 1999–2013, Texas Instruments Incorporated

Typical Performance Characteristics (continued)

Quiescent Current

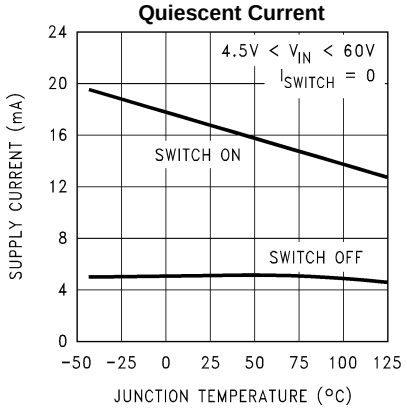

Figure 9.

Standby Quiescent Current

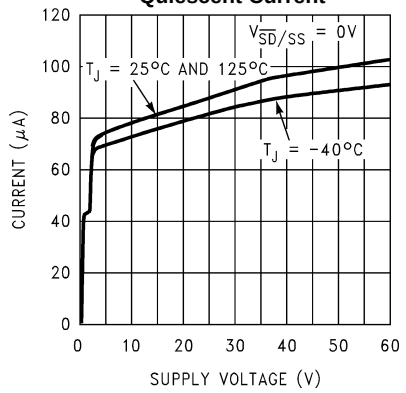

Figure 10.

Minimum Operating Supply Voltage

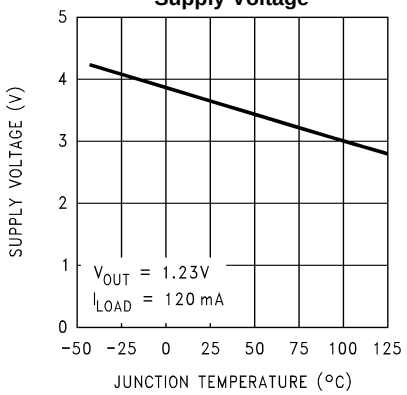

Figure 11.

$\overline{ON}$ /OFF Threshold Voltage

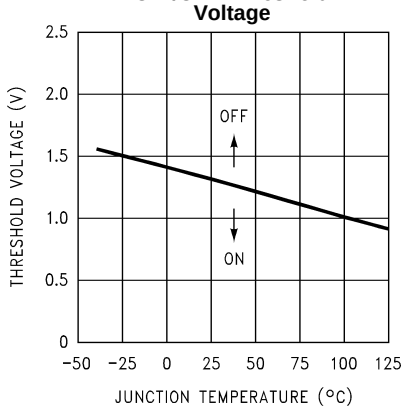

Figure 12.

$\overline{ON}$ /OFF Pin Current (Sinking)

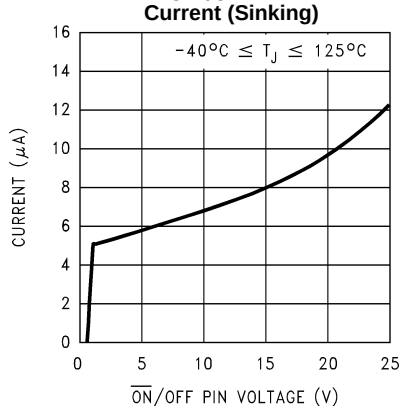

Figure 13.

Switching Frequency

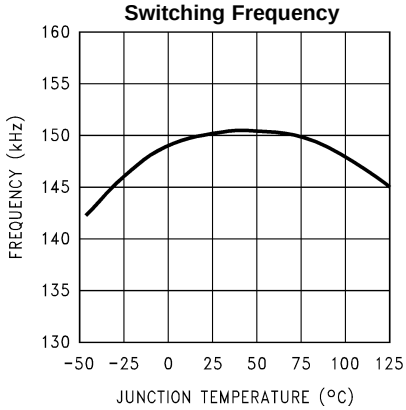

Figure 14.

Typical Performance Characteristics (continued)

Feedback Pin Bias Current

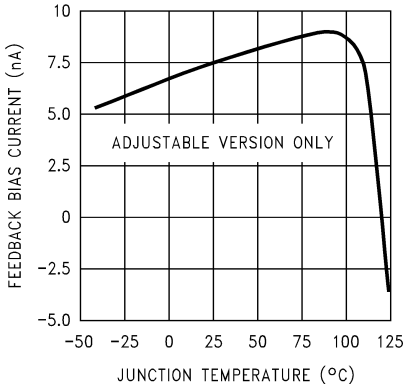

Figure 15.

Copyright © 1999–2013, Texas Instruments Incorporated

Typical Performance Characteristics

Continuous Mode Switching Waveforms
V_{IN} = 20V, V_{OUT} = 5V, I_{LOAD} = 400 mA
L = 100 µH, C_{OUT} = 120 µF, C_{OUT} ESR = 140 mΩ

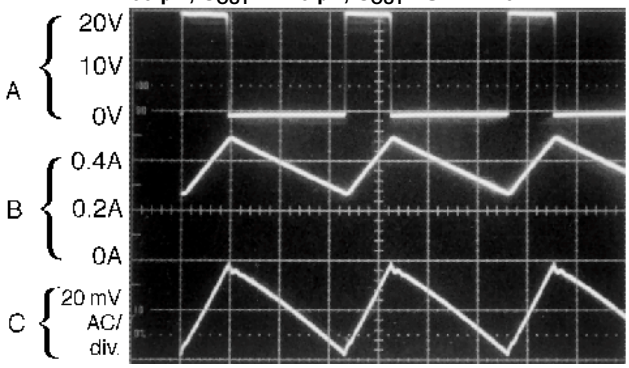

A: Output Pin Voltage, 10V/div.
B: Inductor Current 0.2A/div.
C: Output Ripple Voltage, 20 mV/div.

Figure 16. Horizontal Time Base: 2 µs/div.

Discontinuous Mode Switching Waveforms
V_{IN} = 20V, V_{OUT} = 5V, I_{LOAD} = 200 mA
L = 33 µH, C_{OUT} = 220 µF, C_{OUT} ESR = 60 mΩ

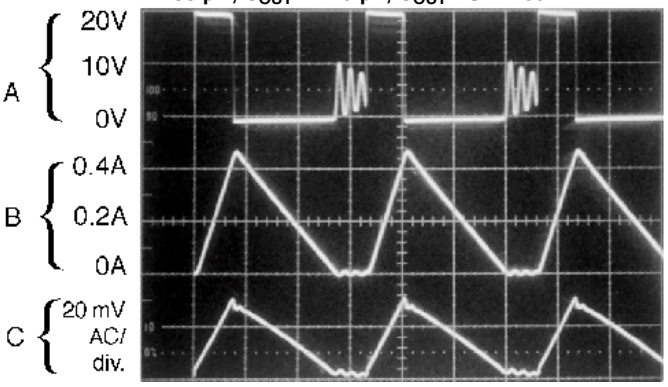

A: Output Pin Voltage, 10V/div.
B: Inductor Current 0.2A/div.
C: Output Ripple Voltage, 20 mV/div.

Figure 17. Horizontal Time Base: 2 µs/div.

Load Transient Response for Continuous Mode
V_{IN} = 20V, V_{OUT} = 5V, I_{LOAD} = 200 mA to 500 mA
L = 100 µH, C_{OUT} = 120 µF, C_{OUT} ESR = 140 mΩ

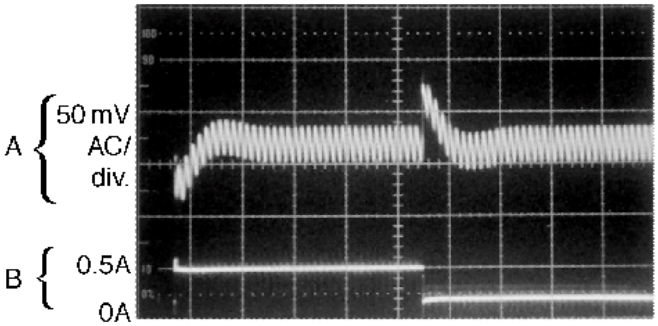

A: Output Voltage, 50 mV/div. (AC)
B: 200 mA to 500 mA Load Pulse

Figure 18. Horizontal Time Base: 50 µs/div.

Load Transient Response for Discontinuous Mode
V_{IN} = 20V, V_{OUT} = 5V, I_{LOAD} = 100 mA to 200 mA
L = 33 µH, C_{OUT} = 220 µF, C_{OUT} ESR = 60 mΩ

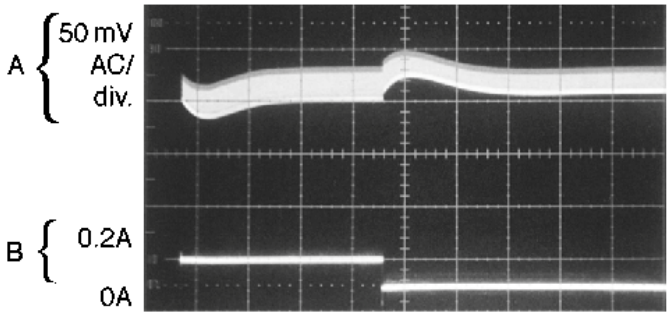

A: Output Voltage, 50 mV/div. (AC)
B: 100 mA to 200 mA Load Pulse

Figure 19. Horizontal Time Base: 200 µs/div.

Copyright © 1999–2013, Texas Instruments Incorporated

TYPICAL CIRCUIT AND LAYOUT GUIDELINES

Fixed Output Voltage Versions

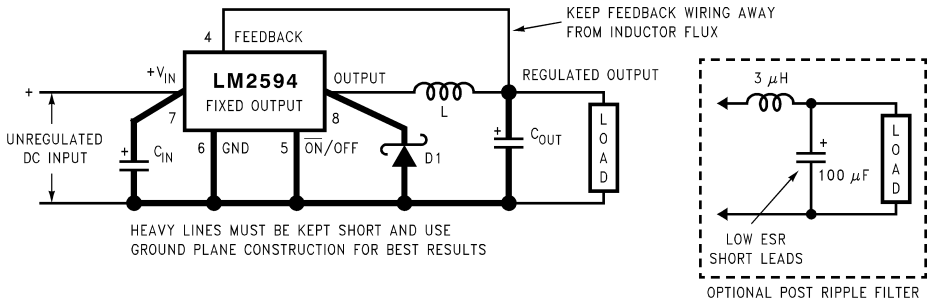

C_{IN} — 68 µF, 35V, Aluminum Electrolytic Nichicon "PL Series"
C_{OUT} — 120 µF, 25V Aluminum Electrolytic, Nichicon "PL Series"
D1 — 1A, 40V Schottky Rectifier, 1N5819
L1 — 100 µH, L20

Select components with higher voltage ratings for designs using the LM2594HV with an input voltage between 40V and 60V.

Adjustable Output Voltage Versions

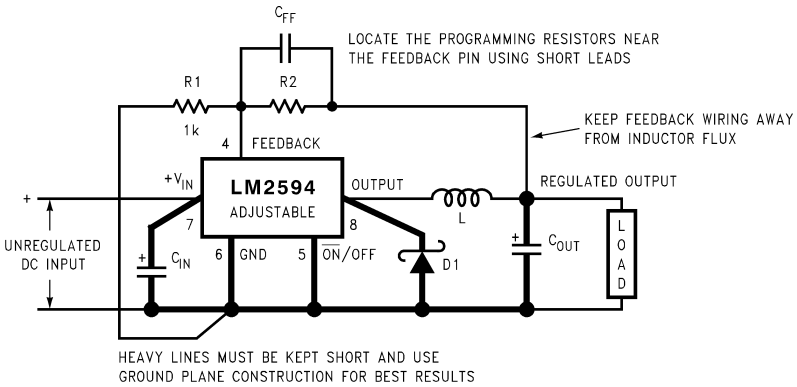

$$V_{OUT} = V_{REF}\left(1 + \frac{R_2}{R_1}\right) \quad \text{where } V_{REF} = 1.23V$$

$$R_2 = R_1\left(\frac{V_{OUT}}{V_{REF}} - 1\right)$$

Select R_1 to be approximately 1 kΩ, use a 1% resistor for best stability.

C_{IN} — 68 µF, 35V, Aluminum Electrolytic Nichicon "PL Series"
C_{OUT} — 120 µF, 25V Aluminum Electrolytic, Nichicon "PL Series"
D1 — 1A, 40V Schottky Rectifier, 1N5819
L1 — 100 µH, L20
R_1 — 1 kΩ, 1%
C_{FF} — See Application Information Section

Figure 20. Typical Circuits and Layout Guides

As in any switching regulator, layout is very important. Rapidly switching currents associated with wiring inductance can generate voltage transients which can cause problems. For minimal inductance and ground loops, the wires indicated by **heavy lines should be wide printed circuit traces and should be kept as short as possible.** For best results, external components should be located as close to the switcher IC as possible using ground plane construction or single point grounding.

If **open core inductors are used,** special care must be taken as to the location and positioning of this type of inductor. Allowing the inductor flux to intersect sensitive feedback, IC groundpath and C_{OUT} wiring can cause problems.

Copyright © 1999–2013, Texas Instruments Incorporated

When using the adjustable version, special care must be taken as to the location of the feedback resistors and the associated wiring. Physically locate both resistors near the IC, and route the wiring away from the inductor, especially an open core type of inductor. (See Application Information section for more information.)

Table 1. LM2594/LM2594HV Series Buck Regulator Design Procedure (Fixed Output)

PROCEDURE (Fixed Output Voltage Version)	EXAMPLE (Fixed Output Voltage Version)
Given: V_{OUT} = Regulated Output Voltage (3.3V, 5V or 12V) V_{IN}(max) = Maximum DC Input Voltage I_{LOAD}(max) = Maximum Load Current	**Given:** V_{OUT} = 5V V_{IN}(max) = 12V I_{LOAD}(max) = 0.4A
1. Inductor Selection (L1) **A.** Select the correct inductor value selection guide from Figure 21 Figure 22 or Figure 23. (Output voltages of 3.3V, 5V, or 12V respectively.) For all other voltages, see the design procedure for the adjustable version. **B.** From the inductor value selection guide, identify the inductance region intersected by the Maximum Input Voltage line and the Maximum Load Current line. Each region is identified by an inductance value and an inductor code (LXX). **C.** Select an appropriate inductor from the four manufacturer's part numbers listed in Table 5.	**1. Inductor Selection (L1)** **A.** Use the inductor selection guide for the 5V version shown in Figure 22. **B.** From the inductor value selection guide shown in Figure 22, the inductance region intersected by the 12V horizontal line and the 0.4A vertical line is 100 µH, and the inductor code is L20. **C.** The inductance value required is 100 µH. From Table 5, go to the L20 line and choose an inductor part number from any of the four manufacturers shown. (In most instance, both through hole and surface mount inductors are available.)
2. Output Capacitor Selection (C_{OUT}) **A.** In the majority of applications, low ESR (Equivalent Series Resistance) electrolytic capacitors between 82 µF and 220 µF and low ESR solid tantalum capacitors between 15 µF and 100 µF provide the best results. This capacitor should be located close to the IC using short capacitor leads and short copper traces. Do not use capacitors larger than 220 µF. **For additional information, see OUTPUT CAPACITOR section in Application Information section.** **B.** To simplify the capacitor selection procedure, refer to the quick design component selection table shown in Figure 24. This table contains different input voltages, output voltages, and load currents, and lists various inductors and output capacitors that will provide the best design solutions. **C.** The capacitor voltage rating for electrolytic capacitors should be at least 1.5 times greater than the output voltage, and often much higher voltage ratings are needed to satisfy the low ESR requirements for low output ripple voltage. **D.** For computer aided design software, see *Switchers Made Simple*™ version 4.1 or later.	**2. Output Capacitor Selection (C_{OUT})** **A. See OUTPUT CAPACITOR section in Application Information section.** **B.** From the quick design component selection table shown in Figure 24, locate the 5V output voltage section. In the load current column, choose the load current line that is closest to the current needed in your application, for this example, use the 0.5A line. In the maximum input voltage column, select the line that covers the input voltage needed in your application, in this example, use the 15V line. Continuing on this line are recommended inductors and capacitors that will provide the best overall performance. The capacitor list contains both through hole electrolytic and surface mount tantalum capacitors from four different capacitor manufacturers. It is recommended that both the manufacturers and the manufacturer's series that are listed in the table be used. In this example aluminum electrolytic capacitors from several different manufacturers are available with the range of ESR numbers needed. 120 µF 25V Panasonic HFQ Series 120 µF 25V Nichicon PL Series **C.** For a 5V output, a capacitor voltage rating at least 7.5V or more is needed. But, in this example, even a low ESR, switching grade, 120 µF 10V aluminum electrolytic capacitor would exhibit approximately 400 mΩ of ESR (see the curve in Figure 26 for the ESR vs voltage rating). This amount of ESR would result in relatively high output ripple voltage. To reduce the ripple to 1% of the output voltage, or less, a capacitor with a higher voltage rating (lower ESR) should be selected. A 16V or 25V capacitor will reduce the ripple voltage by approximately half.

Copyright © 1999–2013, Texas Instruments Incorporated

Table 1. LM2594/LM2594HV Series Buck Regulator Design Procedure (Fixed Output) (continued)

PROCEDURE (Fixed Output Voltage Version)	EXAMPLE (Fixed Output Voltage Version)
3. Catch Diode Selection (D1) **A.** The catch diode current rating must be at least 1.3 times greater than the maximum load current. Also, if the power supply design must withstand a continuous output short, the diode should have a current rating equal to the maximum current limit of the LM2594. The most stressful condition for this diode is an overload or shorted output condition. **B.** The reverse voltage rating of the diode should be at least 1.25 times the maximum input voltage. **C.** This diode must be fast (short reverse recovery time) and must be located close to the LM2594 using short leads and short printed circuit traces. Because of their fast switching speed and low forward voltage drop, Schottky diodes provide the best performance and efficiency, and should be the first choice, especially in low output voltage applications. Ultra-fast recovery, or High-Efficiency rectifiers also provide good results. Ultra-fast recovery diodes typically have reverse recovery times of 50 ns or less. Rectifiers such as the 1N4001 series are much too slow and should not be used.	**3. Catch Diode Selection (D1)** **A.** Refer to the table shown in Table 8. In this example, a 1A, 20V, 1N5817 Schottky diode will provide the best performance, and will not be overstressed even for a shorted output.
4. Input Capacitor (C_{IN}) A low ESR aluminum or tantalum bypass capacitor is needed between the input pin and ground to prevent large voltage transients from appearing at the input. In addition, the RMS current rating of the input capacitor should be selected to be at least ½ the DC load current. The capacitor manufacturers data sheet must be checked to assure that this current rating is not exceeded. The curve shown in Figure 25 shows typical RMS current ratings for several different aluminum electrolytic capacitor values. This capacitor should be located close to the IC using short leads and the voltage rating should be approximately 1.5 times the maximum input voltage. If solid tantalum input capacitors are used, it is recommended that they be surge current tested by the manufacturer. Use caution when using ceramic capacitors for input bypassing, because it may cause severe ringing at the V_{IN} pin. **For additional information, see EXTERNAL COMPONENTS section on input capacitors in Application Information section.**	**4. Input Capacitor (C_{IN})** The important parameters for the Input capacitor are the input voltage rating and the RMS current rating. With a nominal input voltage of 12V, an aluminum electrolytic capacitor with a voltage rating greater than 18V (1.5 × V_{IN}) would be needed. The next higher capacitor voltage rating is 25V. The RMS current rating requirement for the input capacitor in a buck regulator is approximately ½ the DC load current. In this example, with a 400 mA load, a capacitor with a RMS current rating of at least 200 mA is needed. The curves shown in Figure 25 can be used to select an appropriate input capacitor. From the curves, locate the 25V line and note which capacitor values have RMS current ratings greater than 200 mA. Either a 47 µF or 68 µF, 25V capacitor could be used. For a through hole design, a 68 µF/25V electrolytic capacitor (Panasonic HFQ series or Nichicon PL series or equivalent) would be adequate. Other types or other manufacturers capacitors can be used provided the RMS ripple current ratings are adequate. For surface mount designs, solid tantalum capacitors are recommended. The TPS series available from AVX, and the 593D series from Sprague are both surge current tested.

Table 2. LM2594/LM2594HV Fixed Voltage Quick Design Component Selection Table

Conditions			Inductor		Output Capacitor			
					Through Hole		Surface Mount	
Output Voltage (V)	Load Current (A)	Max Input Voltage (V)	Inductance (µH)	Inductor (#)	Panasonic HFQ Series (µF/V)	Nichicon PL Series (µF/V)	AVX TPS Series (µF/V)	Sprague 595D Series (µF/V)
3.3	0.5	5	33	L14	220/16	220/16	100/16	100/6.3
		7	47	L13	120/25	120/25	100/16	100/6.3
		10	68	L21	120/25	120/25	100/16	100/6.3
		40	100	L20	120/35	120/35	100/16	100/6.3
		6	68	L4	120/25	120/25	100/16	100/6.3
	0.2	10	150	L10	120/16	120/16	100/16	100/6.3
		40	220	L9	120/16	120/16	100/16	100/6.3

Copyright © 1999–2013, Texas Instruments Incorporated

Table 2. LM2594/LM2594HV Fixed Voltage Quick Design Component Selection Table (continued)

Conditions			Inductor		Output Capacitor			
					Through Hole		Surface Mount	
Output Voltage (V)	Load Current (A)	Max Input Voltage (V)	Inductance (μH)	Inductor (#)	Panasonic HFQ Series (μF/V)	Nichicon PL Series (μF/V)	AVX TPS Series (μF/V)	Sprague 595D Series (μF/V)
5	0.5	8	47	L13	180/16	180/16	100/16	33/25
		10	68	L21	180/16	180/16	100/16	33/25
		15	100	L20	120/25	120/25	100/16	33/25
		40	150	L19	120/25	120/25	100/16	33/25
		9	150	L10	82/16	82/16	100/16	33/25
	0.2	20	220	L9	120/16	120/16	100/16	33/25
		40	330	L8	120/16	120/16	100/16	33/25
12	0.5	15	68	L21	82/25	82/25	100/16	15/25
		18	150	L19	82/25	82/25	100/16	15/25
		30	220	L27	82/25	82/25	100/16	15/25
		40	330	L26	82/25	82/25	100/16	15/25
		15	100	L11	82/25	82/25	100/16	15/25
	0.2	20	220	L9	82/25	82/25	100/16	15/25
		40	330	L17	82/25	82/25	100/16	15/25

Table 3. LM2594/LM2594HV Series Buck Regulator Design Procedure (Adjustable Output)

PROCEDURE (Adjustable Output Voltage Version)	EXAMPLE (Adjustable Output Voltage Version)
Given: V_{OUT} = Regulated Output Voltage V_{IN}(max) = Maximum Input Voltage I_{LOAD}(max) = Maximum Load Current F = Switching Frequency *(Fixed at a nominal 150 kHz).*	**Given:** V_{OUT} = 20V V_{IN}(max) = 28V I_{LOAD}(max) = 0.5A F = Switching Frequency *(Fixed at a nominal 150 kHz).*
1. Programming Output Voltage (Selecting R_1 and R_2, as shown in Figure 20. Use the following formula to select the appropriate resistor values. $V_{OUT} = V_{REF}\left(1 + \frac{R_2}{R_1}\right)$ where $V_{REF} = 1.23V$ (1) Select a value for R_1 between 240Ω and 1.5 kΩ. The lower resistor values minimize noise pickup in the sensitive feedback pin. (For the lowest temperature coefficient and the best stability with time, use 1% metal film resistors.) $R_2 = R_1\left(\frac{V_{OUT}}{V_{REF}} - 1\right)$ (2)	**1. Programming Output Voltage** (Selecting R_1 and R_2, as shown in Figure 20) Select R_1 to be 1 kΩ, 1%. Solve for R_2. $R_2 = R_1\left(\frac{V_{OUT}}{V_{REF}} - 1\right) = 1k\left(\frac{20V}{1.23V} - 1\right)$ (3) R_2 = 1k (16.26 − 1) = 15.26k, closest 1% value is 15.4 kΩ. R_2 = 15.4 kΩ.

Table 3. LM2594/LM2594HV Series Buck Regulator Design Procedure (Adjustable Output) (continued)

PROCEDURE (Adjustable Output Voltage Version)	EXAMPLE (Adjustable Output Voltage Version)
2. Inductor Selection (L1) **A.** Calculate the inductor Volt microsecond constant E • T (V • µs) , from the following formula: $$E \bullet T = (V_{IN} - V_{OUT} - V_{SAT}) \bullet \frac{V_{OUT} + V_D}{V_{IN} - V_{SAT} + V_D} \bullet \frac{1000}{150\ \text{kHz}} (V \bullet \mu s) \quad (4)$$ where V_{SAT} = internal switch saturation voltage = 0.9V and V_D = diode forward voltage drop = 0.5V **B.** Use the E • T value from the previous formula and match it with the E • T number on the vertical axis of the Inductor Value Selection Guide shown in Figure 24. **C.** on the horizontal axis, select the maximum load current. **D.** Identify the inductance region intersected by the E • T value and the Maximum Load Current value. Each region is identified by an inductance value and an inductor code (LXX). **E.** Select an appropriate inductor from the four manufacturer's part numbers listed in Table 5.	**2. Inductor Selection (L1)** **A.** Calculate the inductor Volt • microsecond constant (E • T) , $$E \bullet T = (28 - 20 - 0.9) \bullet \frac{20 + 0.5}{28 - 0.9 + 0.5} \bullet \frac{1000}{150} (V \bullet \mu s)$$ $$E \bullet T = (7.1) \bullet \frac{20.5}{27.6} \bullet 6.67\ (V \bullet \mu s) = 35.2\ (V \bullet \mu s) \quad (5)$$ **B.** E • T = 35.2 (V • µs) **C.** I_{LOAD}(max) = 0.5A **D.** From the inductor value selection guide shown in Figure 24, the inductance region intersected by the 35 (V • µs) horizontal line and the 0.5A vertical line is 150 µH, and the inductor code is L19. **E.** From Table 5, locate line L19, and select an inductor part number from the list of manufacturers part numbers.
3. Output Capacitor Selection (C_{OUT}) **A.** In the majority of applications, low ESR electrolytic or solid tantalum capacitors between 82 µF and 220 µF provide the best results. This capacitor should be located close to the IC using short capacitor leads and short copper traces. Do not use capacitors larger than 220 µF. **For additional information, see OUTPUT CAPACITOR section in Application Information section.** **B.** To simplify the capacitor selection procedure, refer to the quick design table shown in Table 4. This table contains different output voltages, and lists various output capacitors that will provide the best design solutions. **C.** The capacitor voltage rating should be at least 1.5 times greater than the output voltage, and often much higher voltage ratings are needed to satisfy the low ESR requirements needed for low output ripple voltage.	**3. Output Capacitor Selection (C_{OUT})** **A.** See OUTPUT CAPACITORsection on C_{OUT} in Application Information section. **B.** From the quick design table shown in Table 4, locate the output voltage column. From that column, locate the output voltage closest to the output voltage in your application. In this example, select the 24V line. Under the OUTPUT CAPACITORoutput capacitor, select a capacitor from the list of through hole electrolytic or surface mount tantalum types from four different capacitor manufacturers. It is recommended that both the manufacturers and the manufacturers series that are listed in the table be used. In this example, through hole aluminum electrolytic capacitors from several different manufacturers are available. 82 µF 50V Panasonic HFQ Series 120 µF 50V Nichicon PL Series **C.** For a 20V output, a capacitor rating of at least 30V or more is needed. In this example, either a 35V or 50V capacitor would work. A 50V rating was chosen because it has a lower ESR which provides a lower output ripple voltage. Other manufacturers or other types of capacitors may also be used, provided the capacitor specifications (especially the 100 kHz ESR) closely match the types listed in the table. Refer to the capacitor manufacturers data sheet for this information.
4. Feedforward Capacitor (C_{FF}) (See Figure 20) For output voltages greater than approximately 10V, an additional capacitor is required. The compensation capacitor is typically between 50 pF and 10 nF, and is wired in parallel with the output voltage setting resistor, R_2. It provides additional stability for high output voltages, low input-output voltages, and/or very low ESR output capacitors, such as solid tantalum capacitors. $$C_{FF} = \frac{1}{31 \times 10^3 \times R_2} \quad (6)$$ This capacitor type can be ceramic, plastic, silver mica, etc. (Because of the unstable characteristics of ceramic capacitors made with Z5U material, they are not recommended.)	**4. Feedforward Capacitor (C_{FF})** The table shown in Table 4 contains feed forward capacitor values for various output voltages. In this example, a 1 nF capacitor is needed.

Copyright © 1999–2013, Texas Instruments Incorporated

Table 3. LM2594/LM2594HV Series Buck Regulator Design Procedure (Adjustable Output) (continued)

PROCEDURE (Adjustable Output Voltage Version)	EXAMPLE (Adjustable Output Voltage Version)
5. Catch Diode Selection (D1) **A.** The catch diode current rating must be at least 1.3 times greater than the maximum load current. Also, if the power supply design must withstand a continuous output short, the diode should have a current rating equal to the maximum current limit of the LM2594. The most stressful condition for this diode is an overload or shorted output condition. **B.** The reverse voltage rating of the diode should be at least 1.25 times the maximum input voltage. **C.** This diode must be fast (short reverse recovery time) and must be located close to the LM2594 using short leads and short printed circuit traces. Because of their fast switching speed and low forward voltage drop, Schottky diodes provide the best performance and efficiency, and should be the first choice, especially in low output voltage applications. Ultra-fast recovery, or High-Efficiency rectifiers are also a good choice, but some types with an abrupt turn-off characteristic may cause instability or EMI problems. Ultra-fast recovery diodes typically have reverse recovery times of 50 ns or less. Rectifiers such as the 1N4001 series are much too slow and should not be used.	**5. Catch Diode Selection (D1)** **A.** Refer to the table shown in Table 8. Schottky diodes provide the best performance, and in this example a 1A, 40V, 1N5819 Schottky diode would be a good choice. The 1A diode rating is more than adequate and will not be overstressed even for a shorted output.
6. Input Capacitor (C_{IN}) A low ESR aluminum or tantalum bypass capacitor is needed between the input pin and ground to prevent large voltage transients from appearing at the input. In addition, the RMS current rating of the input capacitor should be selected to be at least ½ the DC load current. The capacitor manufacturers data sheet must be checked to assure that this current rating is not exceeded. The curve shown in Figure 25 shows typical RMS current ratings for several different aluminum electrolytic capacitor values. This capacitor should be located close to the IC using short leads and the voltage rating should be approximately 1.5 times the maximum input voltage. If solid tantalum input capacitors are used, it is recomended that they be surge current tested by the manufacturer. Use caution when using ceramic capacitors for input bypassing, because it may cause severe ringing at the V_{IN} pin. **For additional information, see EXTERNAL COMPONENTS section on input capacitors in Application Information section.**	**6. Input Capacitor (C_{IN})** The important parameters for the Input capacitor are the input voltage rating and the RMS current rating. With a nominal input voltage of 28V, an aluminum electrolytic aluminum electrolytic capacitor with a voltage rating greater than 42V (1.5 × V_{IN}) would be needed. Since the the next higher capacitor voltage rating is 50V, a 50V capacitor should be used. The capacitor voltage rating of (1.5 × V_{IN}) is a conservative guideline, and can be modified somewhat if desired. The RMS current rating requirement for the input capacitor of a buck regulator is approximately ½ the DC load current. In this example, with a 400 mA load, a capacitor with a RMS current rating of at least 200 mA is needed. The curves shown in Figure 25 can be used to select an appropriate input capacitor. From the curves, locate the 50V line and note which capacitor values have RMS current ratings greater than 200 mA. A 47 µF/50V low ESR electrolytic capacitor capacitor is needed. For a through hole design, a 47 µF/50V electrolytic capacitor (Panasonic HFQ series or Nichicon PL series or equivalent) would be adequate. Other types or other manufacturers capacitors can be used provided the RMS ripple current ratings are adequate. For surface mount designs, solid tantalum capacitors are recommended. The TPS series available from AVX, and the 593D series from Sprague are both surge current tested. *To further simplify the buck regulator design procedure, Texas Instruments is making available computer design software to be used with the Simple Switcher line to switching regulators.* ***Switchers Made Simple*** *(version 4.1 or later) is available from TI's web site,* www.ti.com

Table 4. Output Capacitor and Feedforward Capacitor Selection Table

Output Voltage (V)	Through Hole Output Capacitor			Surface Mount Output Capacitor		
	Panasonic HFQ Series (µF/V)	Nichicon PL Series (µF/V)	Feedforward Capacitor	AVX TPS Series (µF/V)	Sprague 595D Series (µF/V)	Feedforward Capacitor
1.2	220/25	220/25	0	220/10	220/10	0
4	180/25	180/25	4.7 nF	100/10	120/10	4.7 nF
6	82/25	82/25	4.7 nF	100/10	120/10	4.7 nF
9	82/25	82/25	3.3 nF	100/16	100/16	3.3 nF
1 2	82/25	82/25	2.2 nF	100/16	100/16	2.2 nF

Copyright © 1999–2013, Texas Instruments Incorporated

Table 4. Output Capacitor and Feedforward Capacitor Selection Table (continued)

Output Voltage (V)	Through Hole Output Capacitor			Surface Mount Output Capacitor		
	Panasonic HFQ Series (µF/V)	Nichicon PL Series (µF/V)	Feedforward Capacitor	AVX TPS Series (µF/V)	Sprague 595D Series (µF/V)	Feedforward Capacitor
1 5	82/25	82/25	1.5 nF	68/20	100/20	1.5 nF
2 4	82/50	120/50	1 nF	10/35	15/35	220 pF
2 8	82/50	120/50	820 pF	10/35	15/35	220 pF

LM2594/LM2594HV Series Buck Regulator Design Procedure

INDUCTOR VALUE SELECTION GUIDES

(For Continuous Mode Operation)

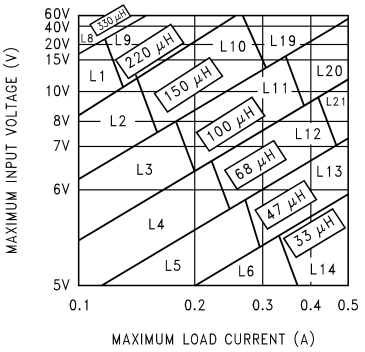

Figure 21. LM2594/LM2594HV-3.3

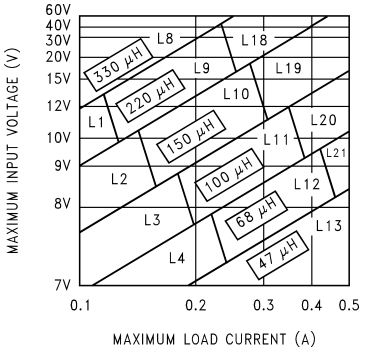

Figure 22. LM2594/LM2594HV-5.0

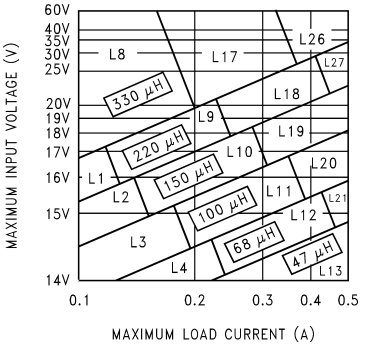

Figure 23. LM2594/LM2594HV-12

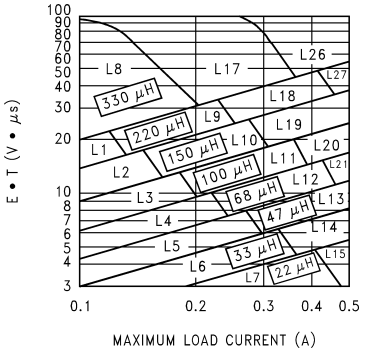

Figure 24. LM2594/LM2594HV-ADJ

Table 5. Inductor Manufacturers Part Numbers

	Inductance (µH)	Current (A)	Schott		Renco		Pulse Engineering		Coilcraft
			Through Hole	Surface Mount	Through Hole	Surface Mount	Through Hole	Surface Mount	Surface Mount
L1	220	0.18	67143910	67144280	RL-5470-3	RL1500-220	PE-53801	PE-53801-S	DO1608-224
L2	150	0.21	67143920	67144290	RL-5470-4	RL1500-150	PE-53802	PE-53802-S	DO1608-154
L3	100	0.26	67143930	67144300	RL-5470-5	RL1500-100	PE-53803	PE-53803-S	DO1608-104
L4	68	0.32	67143940	67144310	RL-1284-68	RL1500-68	PE-53804	PE-53804-S	DO1608-68
L5	47	0.37	67148310	67148420	RL-1284-47	RL1500-47	PE-53805	PE-53805-S	DO1608-473
L6	33	0.44	67148320	67148430	RL-1284-33	RL1500-33	PE-53806	PE-53806-S	DO1608-333
L7	22	0.60	67148330	67148440	RL-1284-22	RL1500-22	PE-53807	PE-53807-S	DO1608-223

Copyright © 1999–2013, Texas Instruments Incorporated

Table 5. Inductor Manufacturers Part Numbers (continued)

	Inductance (μH)	Current (A)	Schott		Renco		Pulse Engineering		Coilcraft
			Through Hole	Surface Mount	Through Hole	Surface Mount	Through Hole	Surface Mount	Surface Mount
L8	330	0.26	67143950	67144320	RL-5470-2	RL1500-330	PE-53808	PE-53808-S	DO3308-334
L9	220	0.32	67143960	67144330	RL-5470-3	RL1500-220	PE-53809	PE-53809-S	DO3308-224
L10	150	0.39	67143970	67144340	RL-5470-4	RL1500-150	PE-53810	PE-53810-S	DO3308-154
L11	100	0.48	67143980	67144350	RL-5470-5	RL1500-100	PE-53811	PE-53811-S	DO3308-104
L12	68	0.58	67143990	67144360	RL-5470-6	RL1500-68	PE-53812	PE-53812-S	DO1608-683
L13	47	0.70	67144000	67144380	RL-5470-7	RL1500-47	PE-53813	PE-53813-S	DO3308-473
L14	33	0.83	67148340	67148450	RL-1284-33	RL1500-33	PE-53814	PE-53814-S	DO1608-333
L15	22	0.99	67148350	67148460	RL-1284-22	RL1500-22	PE-53815	PE-53815-S	DO1608-223
L16	15	1.24	67148360	67148470	RL-1284-15	RL1500-15	PE-53816	PE-53816-S	DO1608-153
L17	330	0.42	67144030	67144410	RL-5471-1	RL1500-330	PE-53817	PE-53817-S	DO3316-334
L18	220	0.55	67144040	67144420	RL-5471-2	RL1500-220	PE-53818	PE-53818-S	DO3316-224
L19	150	0.66	67144050	67144430	RL-5471-3	RL1500-150	PE-53819	PE-53819-S	DO3316-154
L20	100	0.82	67144060	67144440	RL-5471-4	RL1500-100	PE-53820	PE-53820-S	DO3316-104
L21	68	0.99	67144070	67144450	RL-5471-5	RL1500-68	PE-53821	PE-53821-S	DDO3316-683
L26	330	0.80	67144100	67144480	RL-5471-1	—	PE-53826	PE-53826-S	—
L27	220	1.00	67144110	67144490	RL-5471-2	—	PE-53827	PE-53827-S	—

Table 6. Inductor Manufacturers Phone Numbers

Coilcraft Inc.	Phone	(800) 322-2645
	FAX	(708) 639-1469
Coilcraft Inc., Europe	Phone	+44 1236 730 595
	FAX	+44 1236 730 627
Pulse Engineering Inc.	Phone	(619) 674-8100
	FAX	(619) 674-8262
Pulse Engineering Inc.,	Phone	+353 93 24 107
Europe	FAX	+353 93 24 459
Renco Electronics Inc.	Phone	(800) 645-5828
	FAX	(516) 586-5562
Schott Corp.	Phone	(612) 475-1173
	FAX	(612) 475-1786

Table 7. Capacitor Manufacturers Phone Numbers

Nichicon Corp.	Phone	(708) 843-7500
	FAX	(708) 843-2798
Panasonic	Phone	(714) 373-7857
	FAX	(714) 373-7102
AVX Corp.	Phone	(803) 448-9411
	FAX	(803) 448-1943
Sprague/Vishay	Phone	(207) 324-7223
	FAX	(207) 324-4140

Copyright © 1999–2013, Texas Instruments Incorporated

Table 8. Diode Selection Table

VR	1A Diodes			
	Surface Mount		Through Hole	
	Schottky	Ultra Fast Recovery	Schottky	Ultra Fast Recovery
20V		All of these diodes are rated to at least 60V.	1N5817	All of these diodes are rated to at least 60V.
			SR102	
	MBRS130		1N5818	
30V			SR103	
			11DQ03	
	MBRS140	MURS120	1N5819	MUR120
40V	10BQ040	10BF10	SR104	HER101
	10MQ040		11DQ04	11DF1
50V or more	MBRS160		SR105	
	10BQ050		MBR150	
	10MQ060		11DQ05	
	MBRS1100		MBR160	
	10MQ090		SB160	
	SGL41-60		11DQ10	
	SS16			

Block Diagram

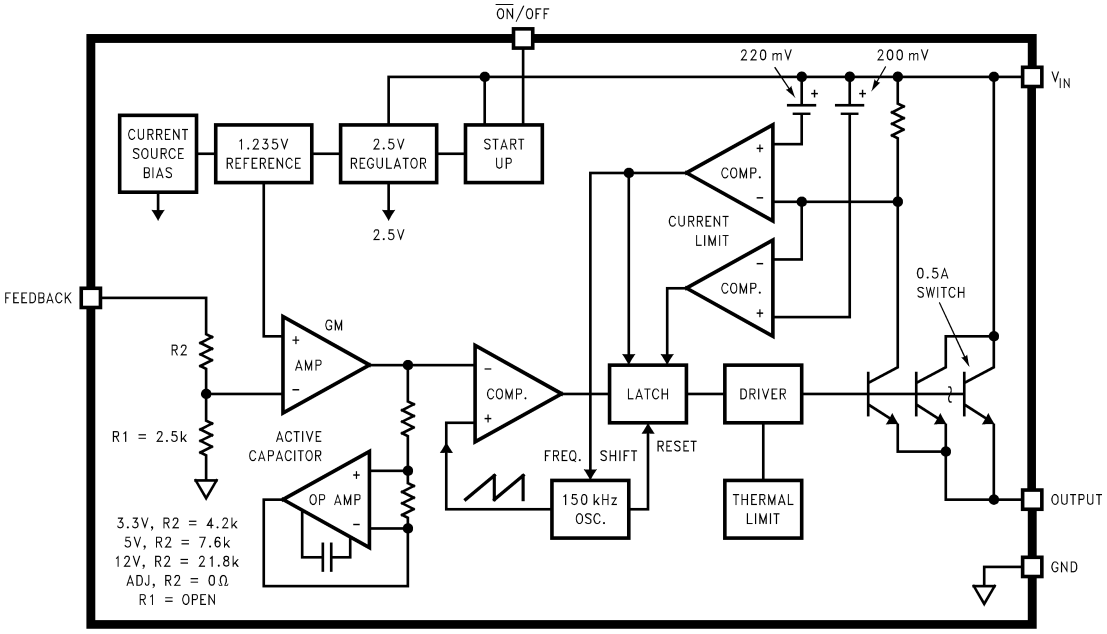

Copyright © 1999–2013, Texas Instruments Incorporated

Application Information

PIN FUNCTIONS

$+V_{IN}$ —This is the positive input supply for the IC switching regulator. A suitable input bypass capacitor must be present at this pin to minimize voltage transients and to supply the switching currents needed by the regulator.

Ground —Circuit ground.

Output —Internal switch. The voltage at this pin switches between ($+V_{IN} - V_{SAT}$) and approximately −0.5V, with a duty cycle of V_{OUT}/V_{IN}. To minimize coupling to sensitive circuitry, the PC board copper area connected to this pin should be kept to a minimum.

Feedback —Senses the regulated output voltage to complete the feedback loop.

$\overline{\text{ON}}$ /OFF —Allows the switching regulator circuit to be shut down using logic level signals thus dropping the total input supply current to approximately 80 µA. Pulling this pin below a threshold voltage of approximately 1.3V turns the regulator on, and pulling this pin above 1.3V (up to a maximum of 25V) shuts the regulator down. If this shutdown feature is not needed, the $\overline{\text{ON}}$ /OFF pin can be wired to the ground pin or it can be left open, in either case the regulator will be in the ON condition.

EXTERNAL COMPONENTS

C_{IN} —A low ESR aluminum or tantalum bypass capacitor is needed between the input pin and ground pin. It must be located near the regulator using short leads. This capacitor prevents large voltage transients from appearing at the input, and provides the instantaneous current needed each time the switch turns on.

The important parameters for the Input capacitor are the voltage rating and the RMS current rating. Because of the relatively high RMS currents flowing in a buck regulator's input capacitor, this capacitor should be chosen for its RMS current rating rather than its capacitance or voltage ratings, although the capacitance value and voltage rating are directly related to the RMS current rating.

The RMS current rating of a capacitor could be viewed as a capacitor's power rating. The RMS current flowing through the capacitors internal ESR produces power which causes the internal temperature of the capacitor to rise. The RMS current rating of a capacitor is determined by the amount of current required to raise the internal temperature approximately 10°C above an ambient temperature of 105°C. The ability of the capacitor to dissipate this heat to the surrounding air will determine the amount of current the capacitor can safely sustain. Capacitors that are physically large and have a large surface area will typically have higher RMS current ratings. For a given capacitor value, a higher voltage electrolytic capacitor will be physically larger than a lower voltage capacitor, and thus be able to dissipate more heat to the surrounding air, and therefore will have a higher RMS current rating.

The consequences of operating an electrolytic capacitor above the RMS current rating is a shortened operating life. The higher temperature speeds up the evaporation of the capacitor's electrolyte, resulting in eventual failure.

Selecting an input capacitor requires consulting the manufacturers data sheet for maximum allowable RMS ripple current. For a maximum ambient temperature of 40°C, a general guideline would be to select a capacitor with a ripple current rating of approximately 50% of the DC load current. For ambient temperatures up to 70°C, a current rating of 75% of the DC load current would be a good choice for a conservative design. The capacitor voltage rating must be at least 1.25 times greater than the maximum input voltage, and often a much higher voltage capacitor is needed to satisfy the RMS current requirements.

A graph shown in Figure 25 shows the relationship between an electrolytic capacitor value, its voltage rating, and the RMS current it is rated for. These curves were obtained from the Nichicon “PL” series of low ESR, high reliability electrolytic capacitors designed for switching regulator applications. Other capacitor manufacturers offer similar types of capacitors, but always check the capacitor data sheet.

“Standard” electrolytic capacitors typically have much higher ESR numbers, lower RMS current ratings and typically have a shorter operating lifetime.

Copyright © 1999–2013, Texas Instruments Incorporated

Because of their small size and excellent performance, surface mount solid tantalum capacitors are often used for input bypassing, but several precautions must be observed. A small percentage of solid tantalum capacitors can short if the inrush current rating is exceeded. This can happen at turn on when the input voltage is suddenly applied, and of course, higher input voltages produce higher inrush currents. Several capacitor manufacturers do a 100% surge current testing on their products to minimize this potential problem. If high turn on currents are expected, it may be necessary to limit this current by adding either some resistance or inductance before the tantalum capacitor, or select a higher voltage capacitor. As with aluminum electrolytic capacitors, the RMS ripple current rating must be sized to the load current.

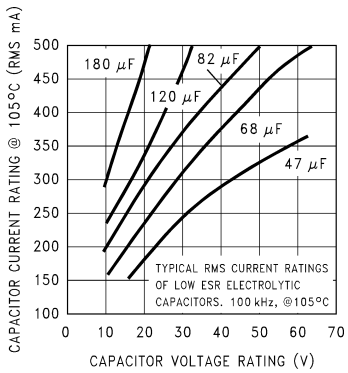

Figure 25. RMS Current Ratings for Low ESR Electrolytic Capacitors (Typical)

OUTPUT CAPACITOR

C_{OUT} —An output capacitor is required to filter the output and provide regulator loop stability. Low impedance or low ESR Electrolytic or solid tantalum capacitors designed for switching regulator applications must be used. When selecting an output capacitor, the important capacitor parameters are; the 100 kHz Equivalent Series Resistance (ESR), the RMS ripple current rating, voltage rating, and capacitance value. For the output capacitor, the ESR value is the most important parameter.

The output capacitor requires an ESR value that has an upper and lower limit. For low output ripple voltage, a low ESR value is needed. This value is determined by the maximum allowable output ripple voltage, typically 1% to 2% of the output voltage. But if the selected capacitor's ESR is extremely low, there is a possibility of an unstable feedback loop, resulting in an oscillation at the output. Using the capacitors listed in the tables, or similar types, will provide design solutions under all conditions.

If very low output ripple voltage (less than 15 mV) is required, refer to the OUTPUT VOLTAGE RIPPLE AND TRANSIENTS section for a post ripple filter.

An aluminum electrolytic capacitor's ESR value is related to the capacitance value and its voltage rating. In most cases, Higher voltage electrolytic capacitors have lower ESR values (see Figure 26). Often, capacitors with much higher voltage ratings may be needed to provide the low ESR values required for low output ripple voltage.

The output capacitor for many different switcher designs often can be satisfied with only three or four different capacitor values and several different voltage ratings. See the quick design component selection tables in Figure 24 and Table 4 for typical capacitor values, voltage ratings, and manufacturers capacitor types.

Electrolytic capacitors are not recommended for temperatures below −25°C. The ESR rises dramatically at cold temperatures and typically rises 3X @ −25°C and as much as 10X at −40°C. See curve shown in Figure 27 .

Solid tantalum capacitors have a much better ESR spec for cold temperatures and are recommended for temperatures below −25°C.

Copyright © 1999–2013, Texas Instruments Incorporated

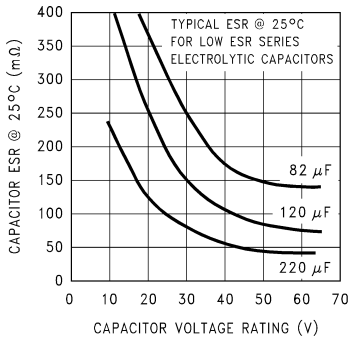

Figure 26. Capacitor ESR vs Capacitor Voltage Rating (Typical Low ESR Electrolytic Capacitor)

CATCH DIODE

Buck regulators require a diode to provide a return path for the inductor current when the switch turns off. This must be a fast diode and must be located close to the LM2594 using short leads and short printed circuit traces.

Because of their very fast switching speed and low forward voltage drop, Schottky diodes provide the best performance, especially in low output voltage applications (5V and lower). Ultra-fast recovery, or High-Efficiency rectifiers are also a good choice, but some types with an abrupt turnoff characteristic may cause instability or EMI problems. Ultra-fast recovery diodes typically have reverse recovery times of 50 ns or less. Rectifiers such as the 1N4001 series are much too slow and should not be used.

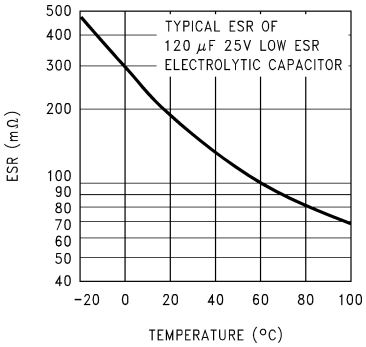

Figure 27. Capacitor ESR Change vs Temperature

INDUCTOR SELECTION

All switching regulators have two basic modes of operation; continuous and discontinuous. The difference between the two types relates to the inductor current, whether it is flowing continuously, or if it drops to zero for a period of time in the normal switching cycle. Each mode has distinctively different operating characteristics, which can affect the regulators performance and requirements. Most switcher designs will operate in the discontinuous mode when the load current is low.

The LM2594 (or any of the Simple Switcher family) can be used for both continuous or discontinuous modes of operation.

In many cases the preferred mode of operation is the continuous mode. It offers greater output power, lower peak switch, inductor and diode currents, and can have lower output ripple voltage. But it does require larger inductor values to keep the inductor current flowing continuously, especially at low output load currents and/or high input voltages.

To simplify the inductor selection process, an inductor selection guide (nomograph) was designed (see Figure 21 through Figure 24). This guide assumes that the regulator is operating in the continuous mode, and selects an inductor that will allow a peak-to-peak inductor ripple current to be a certain percentage of the maximum design load current. This peak-to-peak inductor ripple current percentage is not fixed, but is allowed to change as different design load currents are selected. (See Figure 28.)

Copyright © 1999–2013, Texas Instruments Incorporated

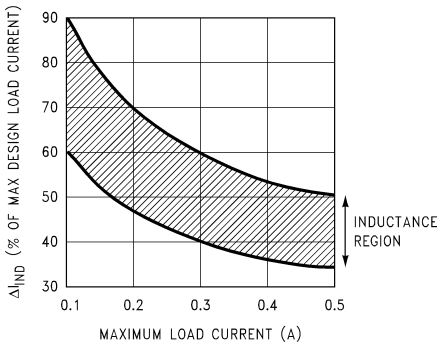

Figure 28. (ΔI_{IND}) Peak-to-Peak Inductor Ripple Current (as a Percentage of the Load Current) vs Load Current

By allowing the percentage of inductor ripple current to increase for low load currents, the inductor value and size can be kept relatively low.

When operating in the continuous mode, the inductor current waveform ranges from a triangular to a sawtooth type of waveform (depending on the input voltage), with the average value of this current waveform equal to the DC output load current.

Inductors are available in different styles such as pot core, toroid, E-core, bobbin core, etc., as well as different core materials, such as ferrites and powdered iron. The least expensive, the bobbin, rod or stick core, consists of wire wrapped on a ferrite bobbin. This type of construction makes for a inexpensive inductor, but since the magnetic flux is not completely contained within the core, it generates more Electro-Magnetic Interference (EMI). This magnetic flux can induce voltages into nearby printed circuit traces, thus causing problems with both the switching regulator operation and nearby sensitive circuitry, and can give incorrect scope readings because of induced voltages in the scope probe. Also see OPEN CORE INDUCTORS section.

The inductors listed in the selection chart include ferrite E-core construction for Schott, ferrite bobbin core for Renco and Coilcraft, and powdered iron toroid for Pulse Engineering.

Exceeding an inductor's maximum current rating may cause the inductor to overheat because of the copper wire losses, or the core may saturate. If the inductor begins to saturate, the inductance decreases rapidly and the inductor begins to look mainly resistive (the DC resistance of the winding). This can cause the switch current to rise very rapidly and force the switch into a cycle-by-cycle current limit, thus reducing the DC output load current. This can also result in overheating of the inductor and/or the LM2594. Different inductor types have different saturation characteristics, and this should be kept in mind when selecting an inductor.

The inductor manufacturers data sheets include current and energy limits to avoid inductor saturation.

DISCONTINUOUS MODE OPERATION

The selection guide chooses inductor values suitable for continuous mode operation, but for low current applications and/or high input voltages, a discontinuous mode design may be a better choice. It would use an inductor that would be physically smaller, and would need only one half to one third the inductance value needed for a continuous mode design. The peak switch and inductor currents will be higher in a discontinuous design, but at these low load currents (200 mA and below), the maximum switch current will still be less than the switch current limit.

Discontinuous operation can have voltage waveforms that are considerable different than a continuous design. The output pin (switch) waveform can have some damped sinusoidal ringing present. (See Figure 17 titled; Discontinuous Mode Switching Waveforms) This ringing is normal for discontinuous operation, and is not caused by feedback loop instabilities. In discontinuous operation, there is a period of time where neither the switch or the diode are conducting, and the inductor current has dropped to zero. During this time, a small amount of energy can circulate between the inductor and the switch/diode parasitic capacitance causing this characteristic ringing. Normally this ringing is not a problem, unless the amplitude becomes great enough to exceed the input voltage, and even then, there is very little energy present to cause damage.

Copyright © 1999–2013, Texas Instruments Incorporated

Different inductor types and/or core materials produce different amounts of this characteristic ringing. Ferrite core inductors have very little core loss and therefore produce the most ringing. The higher core loss of powdered iron inductors produce less ringing. If desired, a series RC could be placed in parallel with the inductor to dampen the ringing. The computer aided design software ***Switchers Made Simple*** (version 4.1) will provide all component values for continuous and discontinuous modes of operation.

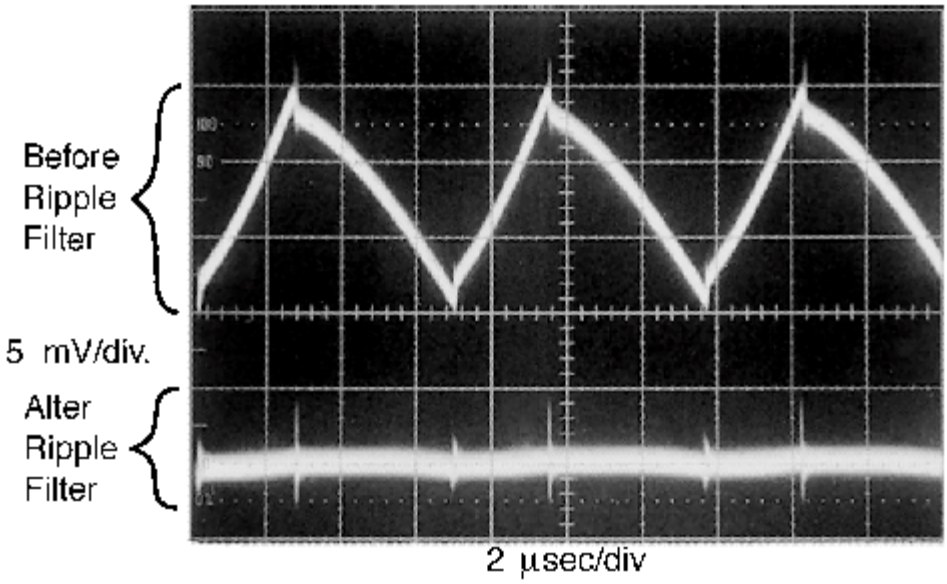

Figure 29. Post Ripple Filter Waveform

OUTPUT VOLTAGE RIPPLE AND TRANSIENTS

The output voltage of a switching power supply operating in the continuous mode will contain a sawtooth ripple voltage at the switcher frequency, and may also contain short voltage spikes at the peaks of the sawtooth waveform.

The output ripple voltage is a function of the inductor sawtooth ripple current and the ESR of the output capacitor. A typical output ripple voltage can range from approximately 0.5% to 3% of the output voltage. To obtain low ripple voltage, the ESR of the output capacitor must be low, however, caution must be exercised when using extremely low ESR capacitors because they can affect the loop stability, resulting in oscillation problems. If very low output ripple voltage is needed (less than 15 mV), a post ripple filter is recommended. (See Figure 20.) The inductance required is typically between 1 µH and 5 µH, with low DC resistance, to maintain good load regulation. A low ESR output filter capacitor is also required to assure good dynamic load response and ripple reduction. The ESR of this capacitor may be as low as desired, because it is out of the regulator feedback loop. The photo shown in Figure 29 shows a typical output ripple voltage, with and without a post ripple filter.

When observing output ripple with a scope, it is essential that a short, low inductance scope probe ground connection be used. Most scope probe manufacturers provide a special probe terminator which is soldered onto the regulator board, preferable at the output capacitor. This provides a very short scope ground thus eliminating the problems associated with the 3 inch ground lead normally provided with the probe, and provides a much cleaner and more accurate picture of the ripple voltage waveform.

The voltage spikes are caused by the fast switching action of the output switch and the diode, and the parasitic inductance of the output filter capacitor, and its associated wiring. To minimize these voltage spikes, the output capacitor should be designed for switching regulator applications, and the lead lengths must be kept very short. Wiring inductance, stray capacitance, as well as the scope probe used to evaluate these transients, all contribute to the amplitude of these spikes.

When a switching regulator is operating in the continuous mode, the inductor current waveform ranges from a triangular to a sawtooth type of waveform (depending on the input voltage). For a given input and output voltage, the peak-to-peak amplitude of this inductor current waveform remains constant. As the load current increases or decreases, the entire sawtooth current waveform also rises and falls. The average value (or the center) of this current waveform is equal to the DC load current.

Copyright © 1999–2013, Texas Instruments Incorporated

If the load current drops to a low enough level, the bottom of the sawtooth current waveform will reach zero, and the switcher will smoothly change from a continuous to a discontinuous mode of operation. Most switcher designs (irregardless how large the inductor value is) will be forced to run discontinuous if the output is lightly loaded. This is a perfectly acceptable mode of operation.

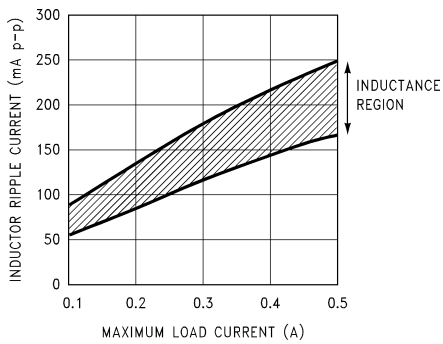

Figure 30. Peak-to-Peak Inductor Ripple Current vs Load Current

In a switching regulator design, knowing the value of the peak-to-peak inductor ripple current (ΔI_{IND}) can be useful for determining a number of other circuit parameters. Parameters such as, peak inductor or peak switch current, minimum load current before the circuit becomes discontinuous, output ripple voltage and output capacitor ESR can all be calculated from the peak-to-peak ΔI_{IND}. When the inductor nomographs shown in Figure 21 through Figure 24 are used to select an inductor value, the peak-to-peak inductor ripple current can immediately be determined. The curve shown in Figure 30 shows the range of (ΔI_{IND}) that can be expected for different load currents. The curve also shows how the peak-to-peak inductor ripple current (ΔI_{IND}) changes as you go from the lower border to the upper border (for a given load current) within an inductance region. The upper border represents a higher input voltage, while the lower border represents a lower input voltage (see Inductor Selection Guides).

These curves are only correct for continuous mode operation, and only if the inductor selection guides are used to select the inductor value

Consider the following example:

V_{OUT} = 5V, maximum load current of 300 mA

V_{IN} = 15V, nominal, varying between 11V and 20V.

The selection guide in *Figure 22* shows that the vertical line for a 0.3A load current, and the horizontal line for the 15V input voltage intersect approximately midway between the upper and lower borders of the 150 µH inductance region. A 150 µH inductor will allow a peak-to-peak inductor current (ΔI_{IND}) to flow that will be a percentage of the maximum load current. Referring to Figure 30, follow the 0.3A line approximately midway into the inductance region, and read the peak-to-peak inductor ripple current (ΔI_{IND}) on the left hand axis (approximately 150 mA p-p).

As the input voltage increases to 20V, it approaches the upper border of the inductance region, and the inductor ripple current increases. Referring to the curve in Figure 30, it can be seen that for a load current of 0.3A, the peak-to-peak inductor ripple current (ΔI_{IND}) is 150 mA with 15V in, and can range from 175 mA at the upper border (20V in) to 120 mA at the lower border (11V in).

 Copyright © 1999–2013, Texas Instruments Incorporated

Once the ΔI_{IND} value is known, the following formulas can be used to calculate additional information about the switching regulator circuit.

1. Peak Inductor or peak switch current

$$= \left(I_{LOAD} + \frac{\Delta I_{IND}}{2}\right) = \left(0.3A + \frac{0.150}{2}\right) = 0.375A$$

2. Minimum load current before the circuit becomes discontinuous

$$= \frac{\Delta I_{IND}}{2} = \frac{0.150}{2} = 0.075A$$

3. Output Ripple Voltage
   - $= (\Delta I_{IND}) \times (\text{ESR of } C_{OUT})$
   - $= 0.150A \times 0.240\Omega = 36$ mV p-p
   - or
4. ESR of C_{OUT}

$$= \frac{\text{Output Ripple Voltage } (\Delta V_{OUT})}{\Delta I_{IND}}$$

$$= \frac{0.036V}{0.150A} = 0.240\Omega$$

OPEN CORE INDUCTORS

Another possible source of increased output ripple voltage or unstable operation is from an open core inductor. Ferrite bobbin or stick inductors have magnetic lines of flux flowing through the air from one end of the bobbin to the other end. These magnetic lines of flux will induce a voltage into any wire or PC board copper trace that comes within the inductor's magnetic field. The strength of the magnetic field, the orientation and location of the PC copper trace to the magnetic field, and the distance between the copper trace and the inductor, determine the amount of voltage generated in the copper trace. Another way of looking at this inductive coupling is to consider the PC board copper trace as one turn of a transformer (secondary) with the inductor winding as the primary. Many millivolts can be generated in a copper trace located near an open core inductor which can cause stability problems or high output ripple voltage problems.

If unstable operation is seen, and an open core inductor is used, it's possible that the location of the inductor with respect to other PC traces may be the problem. To determine if this is the problem, temporarily raise the inductor away from the board by several inches and then check circuit operation. If the circuit now operates correctly, then the magnetic flux from the open core inductor is causing the problem. Substituting a closed core inductor such as a torroid or E-core will correct the problem, or re-arranging the PC layout may be necessary. Magnetic flux cutting the IC device ground trace, feedback trace, or the positive or negative traces of the output capacitor should be minimized.

Sometimes, locating a trace directly beneath a bobbin in- ductor will provide good results, provided it is exactly in the center of the inductor (because the induced voltages cancel themselves out), but if it is off center one direction or the other, then problems could arise. If flux problems are present, even the direction of the inductor winding can make a difference in some circuits.

This discussion on open core inductors is not to frighten the user, but to alert the user on what kind of problems to watch out for when using them. Open core bobbin or “stick” inductors are an inexpensive, simple way of making a compact efficient inductor, and they are used by the millions in many different applications.

THERMAL CONSIDERATIONS

The LM2594/LM2594HV is available in two packages, an 8-pin through hole PDIP (P) and an 8-pin surface mount SOIC-8 (D). Both packages are molded plastic with a copper lead frame. When the package is soldered to the PC board, the copper and the board are the heat sink for the LM2594 and the other heat producing components.

For best thermal performance, wide copper traces should be used and all ground and unused pins should be soldered to generous amounts of printed circuit board copper, such as a ground plane (one exception to this is the output (switch) pin, which should not have large areas of copper). Large areas of copper provide the best transfer of heat (lower thermal resistance) to the surrounding air, and even double-sided or multilayer boards provide a better heat path to the surrounding air. Unless power levels are small, sockets are not recommended because of the added thermal resistance it adds and the resultant higher junction temperatures.

Copyright © 1999–2013, Texas Instruments Incorporated

Package thermal resistance and junction temperature rise numbers are all approximate, and there are many factors that will affect the junction temperature. Some of these factors include board size, shape, thickness, position, location, and even board temperature. Other factors are, trace width, printed circuit copper area, copper thickness, single- or double-sided, multilayer board, and the amount of solder on the board. The effectiveness of the PC board to dissipate heat also depends on the size, quantity and spacing of other components on the board. Furthermore, some of these components such as the catch diode will add heat to the PC board and the heat can vary as the input voltage changes. For the inductor, depending on the physical size, type of core material and the DC resistance, it could either act as a heat sink taking heat away from the board, or it could add heat to the board.

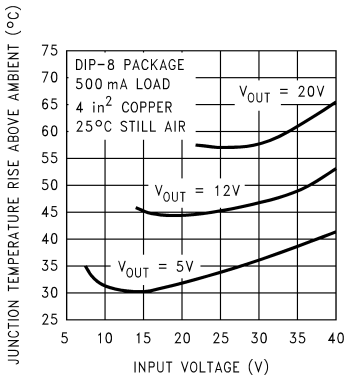

Circuit Data for Temperature Rise Curve (PDIP-8)

Capacitors	Through hole electrolytic
Inductor	Through hole, Schott, 100 µH
Diode	Through hole, 1A 40V, Schottky
PC board	4 square inches single sided 2 oz. copper (0.0028″)

Figure 31. Junction Temperature Rise, PDIP-8

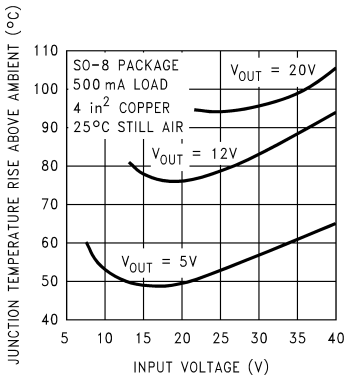

Circuit Data for Temperature Rise Curve
(Surface Mount)

Capacitors	Surface mount tantalum, molded “D” size
Inductor	Surface mount, Coilcraft DO33, 100 µH
Diode	Surface mount, 1A 40V, Schottky
PC board	4 square inches single sided 2 oz. copper (0.0028″)

Figure 32. Junction Temperature Rise, SOIC-8

Copyright © 1999–2013, Texas Instruments Incorporated

The curves shown in Figure 31 and Figure 32 show the LM2594 junction temperature rise above ambient temperature with a 500 mA load for various input and output voltages. This data was taken with the circuit operating as a buck switcher with all components mounted on a PC board to simulate the junction temperature under actual operating conditions. This curve is typical, and can be used for a quick check on the maximum junction temperature for various conditions, but keep in mind that there are many factors that can affect the junction temperature.

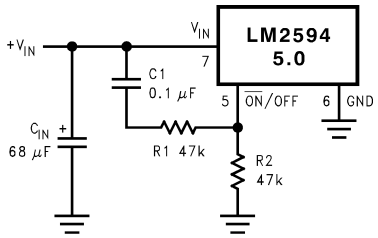

Figure 33. Delayed Startup

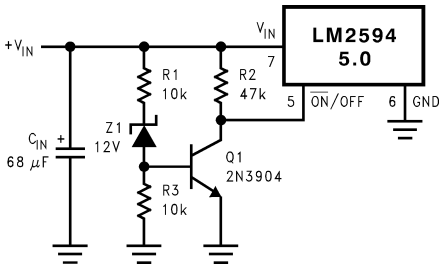

Figure 34. Undervoltage Lockout for Buck Regulator

DELAYED STARTUP

The circuit in Figure 33 uses the the $\overline{\text{ON}}$ /OFF pin to provide a time delay between the time the input voltage is applied and the time the output voltage comes up (only the circuitry pertaining to the delayed start up is shown). As the input voltage rises, the charging of capacitor C1 pulls the $\overline{\text{ON}}$ /OFF pin high, keeping the regulator off. Once the input voltage reaches its final value and the capacitor stops charging, and resistor R_2 pulls the $\overline{\text{ON}}$ /OFF pin low, thus allowing the circuit to start switching. Resistor R_1 is included to limit the maximum voltage applied to the $\overline{\text{ON}}$ /OFF pin (maximum of 25V), reduces power supply noise sensitivity, and also limits the capacitor, C1, discharge current. When high input ripple voltage exists, avoid long delay time, because this ripple can be coupled into the $\overline{\text{ON}}$ /OFF pin and cause problems.

This delayed startup feature is useful in situations where the input power source is limited in the amount of current it can deliver. It allows the input voltage to rise to a higher voltage before the regulator starts operating. Buck regulators require less input current at higher input voltages.

UNDERVOLTAGE LOCKOUT

Some applications require the regulator to remain off until the input voltage reaches a predetermined voltage. An undervoltage lockout feature applied to a buck regulator is shown in Figure 34, while Figure 35 and Figure 36 applies the same feature to an inverting circuit. The circuit in Figure 35 features a constant threshold voltage for turn on and turn off (zener voltage plus approximately one volt). If hysteresis is needed, the circuit in Figure 36 has a turn ON voltage which is different than the turn OFF voltage. The amount of hysteresis is approximately equal to the value of the output voltage. If zener voltages greater than 25V are used, an additional 47 kΩ resistor is needed from the $\overline{\text{ON}}$ /OFF pin to the ground pin to stay within the 25V maximum limit of the $\overline{\text{ON}}$ /OFF pin.

INVERTING REGULATOR

The circuit in Figure 37 converts a positive input voltage to a negative output voltage with a common ground. The circuit operates by bootstrapping the regulators ground pin to the negative output voltage, then grounding the feedback pin, the regulator senses the inverted output voltage and regulates it.

Copyright © 1999–2013, Texas Instruments Incorporated

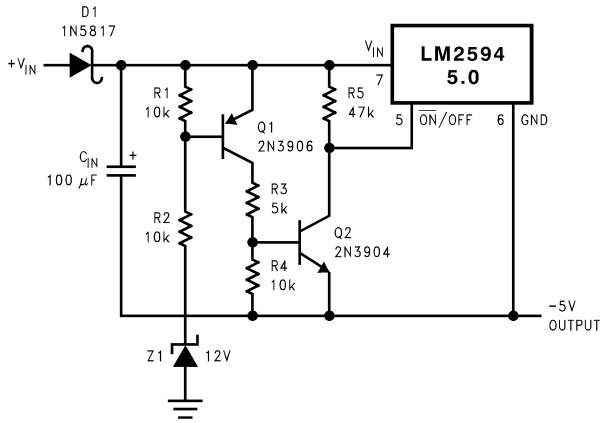

This circuit has an ON/OFF threshold of approximately 13V.

Figure 35. Undervoltage Lockout for Inverting Regulator

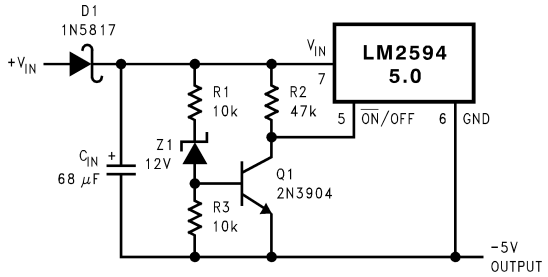

This circuit has hysteresis

Regulator starts switching at V_{IN} = 13V

Regulator stops switching at V_{IN} = 8V

Figure 36. Undervoltage Lockout with Hysteresis for Inverting Regulator

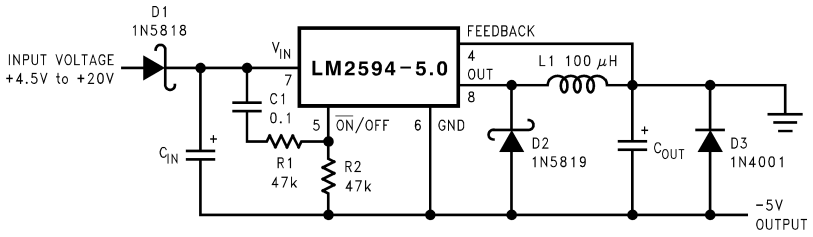

C_{IN} — 68 µF/25V Tant. Sprague 595D
120 µF/35V Elec. Panasonic HFQ

C_{OUT} — 22 µF/20V Tant. Sprague 595D
39 µF/16V Elec. Panasonic HFQ

Figure 37. Inverting −5V Regulator with Delayed Startup

This example uses the LM2594-5 to generate a −5V output, but other output voltages are possible by selecting other output voltage versions, including the adjustable version. Since this regulator topology can produce an output voltage that is either greater than or less than the input voltage, the maximum output current greatly depends on both the input and output voltage. The curve shown in Figure 38 provides a guide as to the amount of output load current possible for the different input and output voltage conditions.

The maximum voltage appearing across the regulator is the absolute sum of the input and output voltage, and this must be limited to a maximum of 40V. For example, when converting +20V to −12V, the regulator would see 32V between the input pin and ground pin. The LM2594 has a maximum input voltage spec of 40V (60V for the LM2594HV).

Copyright © 1999–2013, Texas Instruments Incorporated

Additional diodes are required in this regulator configuration. Diode D1 is used to isolate input voltage ripple or noise from coupling through the C_{IN} capacitor to the output, under light or no load conditions. Also, this diode isolation changes the topology to closley resemble a buck configuration thus providing good closed loop stability. A Schottky diode is recommended for low input voltages, (because of its lower voltage drop) but for higher input voltages, a fast recovery diode could be used.

Without diode D3, when the input voltage is first applied, the charging current of C_{IN} can pull the output positive by several volts for a short period of time. Adding D3 prevents the output from going positive by more than a diode voltage.

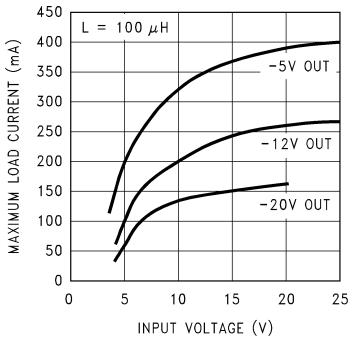

Figure 38. Inverting Regulator Typical Load Current

Because of differences in the operation of the inverting regulator, the standard design procedure is not used to select the inductor value. In the majority of designs, a 100 µH, 1A inductor is the best choice. Capacitor selection can also be narrowed down to just a few values. Using the values shown in Figure 37 will provide good results in the majority of inverting designs.

This type of inverting regulator can require relatively large amounts of input current when starting up, even with light loads. Input currents as high as the LM2594 current limit (approx 0.8A) are needed for at least 2 ms or more, until the output reaches its nominal output voltage. The actual time depends on the output voltage and the size of the output capacitor. Input power sources that are current limited or sources that can not deliver these currents without getting loaded down, may not work correctly. Because of the relatively high startup currents required by the inverting topology, the delayed startup feature (C1, R_1 and R_2) shown in Figure 37 is recommended. By delaying the regulator startup, the input capacitor is allowed to charge up to a higher voltage before the switcher begins operating. A portion of the high input current needed for startup is now supplied by the input capacitor (C_{IN}). For severe start up conditions, the input capacitor can be made much larger than normal.

INVERTING REGULATOR SHUTDOWN METHODS

To use the $\overline{ON}$ /OFF pin in a standard buck configuration is simple, pull it below 1.3V (@25°C, referenced to ground) to turn regulator ON, pull it above 1.3V to shut the regulator OFF. With the inverting configuration, some level shifting is required, because the ground pin of the regulator is no longer at ground, but is now setting at the negative output voltage level. Two different shutdown methods for inverting regulators are shown in Figure 39 and Figure 40.

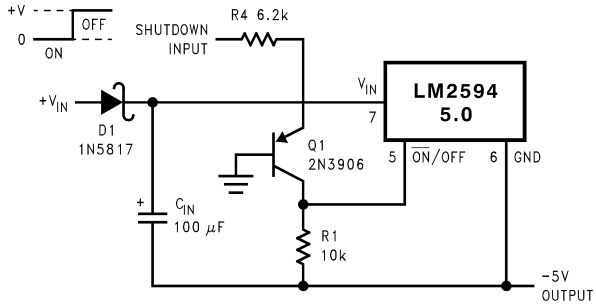

Figure 39. Inverting Regulator Ground Referenced Shutdown

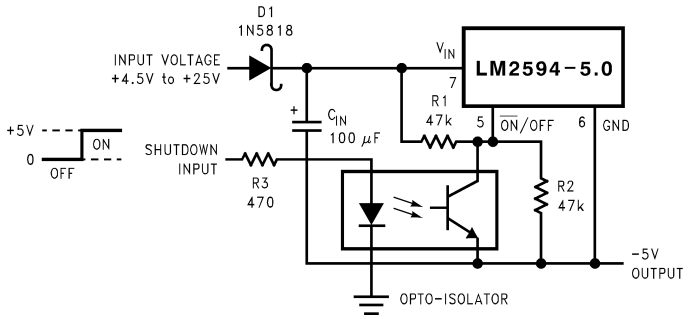

Figure 40. Inverting Regulator Ground Referenced Shutdown using Opto Device

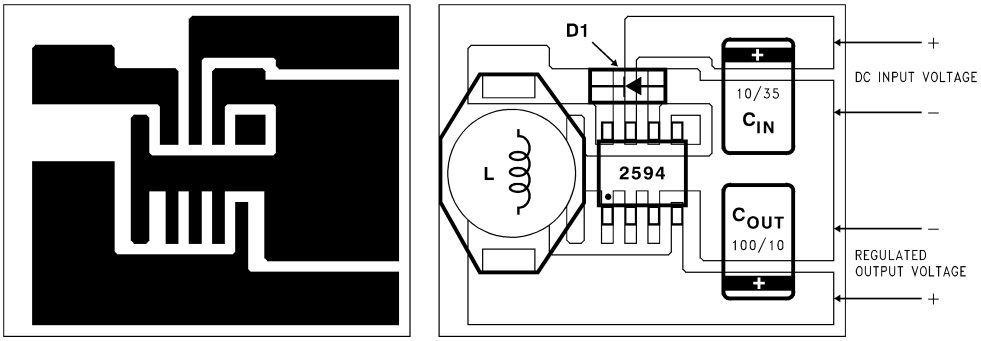

Figure 41. TYPICAL SURFACE MOUNT PC BOARD LAYOUT, FIXED OUTPUT (2X SIZE)

C_{IN} — 10 µF, 35V, Solid Tantalum AVX, "TPS series"

C_{OUT} — 100 µF, 10V Solid Tantalum AVX, "TPS series"

D1 — 1A, 40V Schottky Rectifier, surface mount

L1 — 100 µH, L20, Coilcraft DO33

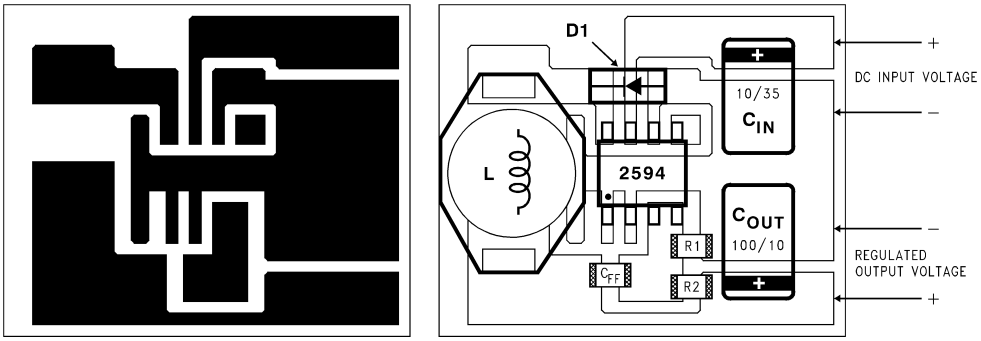

Figure 42. TYPICAL SURFACE MOUNT PC BOARD LAYOUT, ADJUSTABLE OUTPUT (2X SIZE)

C_{IN} — 10 µF, 35V, Solid Tantalum AVX, "TPS series"

C_{OUT} — 100 µF, 10V Solid Tantalum AVX, "TPS series"

D1 — 1A, 40V Schottky Rectifier, surface mount

L1 — 100 µH, L20, Coilcraft DO33

R1 — 1 kΩ, 1%

R_2 — Use formula in Design Procedure

C_{FF} — See Table 4.

Copyright © 1999–2013, Texas Instruments Incorporated

REVISION HISTORY

Changes from Revision B (April 2013) to Revision C	Page
• Changed layout of National Data Sheet to TI format	31

Copyright © 1999–2013, Texas Instruments Incorporated

PACKAGING INFORMATION

Orderable Device	Status (1)	Package Type	Package Drawing	Pins	Package Qty	Eco Plan (2)	Lead/Ball Finish	MSL Peak Temp (3)	Op Temp (°C)	Top-Side Markings (4)	Samples
LM2594HVM-12	ACTIVE	SOIC	D	8	95	TBD	Call TI	Call TI	-40 to 125	2594H M-12	Samples
LM2594HVM-12/NOPB	ACTIVE	SOIC	D	8	95	Green (RoHS & no Sb/Br)	CU SN	Level-1-260C-UNLIM	-40 to 125	2594H M-12	Samples
LM2594HVM-3.3	ACTIVE	SOIC	D	8	95	TBD	Call TI	Call TI	-40 to 125	2594H M-3.3	Samples
LM2594HVM-3.3/NOPB	ACTIVE	SOIC	D	8	95	Green (RoHS & no Sb/Br)	CU SN	Level-1-260C-UNLIM	-40 to 125	2594H M-3.3	Samples
LM2594HVM-5.0	ACTIVE	SOIC	D	8	95	TBD	Call TI	Call TI	-40 to 125	2594H M-5.0	Samples
LM2594HVM-5.0/NOPB	ACTIVE	SOIC	D	8	95	Green (RoHS & no Sb/Br)	CU SN	Level-1-260C-UNLIM	-40 to 125	2594H M-5.0	Samples
LM2594HVM-ADJ	ACTIVE	SOIC	D	8	95	TBD	Call TI	Call TI	-40 to 125	2594H M-ADJ	Samples
LM2594HVM-ADJ/NOPB	ACTIVE	SOIC	D	8	95	Green (RoHS & no Sb/Br)	CU SN	Level-1-260C-UNLIM	-40 to 125	2594H M-ADJ	Samples
LM2594HVMX-12	ACTIVE	SOIC	D	8	2500	TBD	Call TI	Call TI	-40 to 125	2594H M-12	Samples
LM2594HVMX-12/NOPB	ACTIVE	SOIC	D	8	2500	Green (RoHS & no Sb/Br)	CU SN	Level-1-260C-UNLIM	-40 to 125	2594H M-12	Samples
LM2594HVMX-3.3	ACTIVE	SOIC	D	8	2500	TBD	Call TI	Call TI	-40 to 125	2594H M-3.3	Samples
LM2594HVMX-3.3/NOPB	ACTIVE	SOIC	D	8	2500	Green (RoHS & no Sb/Br)	CU SN	Level-1-260C-UNLIM	-40 to 125	2594H M-3.3	Samples
LM2594HVMX-5.0	ACTIVE	SOIC	D	8	2500	TBD	Call TI	Call TI	-40 to 125	2594H M-5.0	Samples
LM2594HVMX-5.0/NOPB	ACTIVE	SOIC	D	8	2500	Green (RoHS & no Sb/Br)	CU SN	Level-1-260C-UNLIM	-40 to 125	2594H M-5.0	Samples
LM2594HVMX-ADJ/NOPB	ACTIVE	SOIC	D	8	2500	Green (RoHS & no Sb/Br)	CU SN	Level-1-260C-UNLIM	-40 to 125	2594H M-ADJ	Samples
LM2594HVN-12	ACTIVE	PDIP	P	8	40	TBD	Call TI	Call TI	-40 to 125	LM2594HV N-12 P+	Samples
LM2594HVN-12/NOPB	ACTIVE	PDIP	P	8	40	Green (RoHS & no Sb/Br)	SN	Level-1-NA-UNLIM	-40 to 125	LM2594HV N-12 P+	Samples

Orderable Device	Status (1)	Package Type	Package Drawing	Pins	Package Qty	Eco Plan (2)	Lead/Ball Finish	MSL Peak Temp (3)	Op Temp (°C)	Top-Side Markings (4)	Samples
LM2594HVN-3.3	ACTIVE	PDIP	P	8	40	TBD	Call TI	Call TI	-40 to 125	LM2594HV N-3.3 P+	Samples
LM2594HVN-3.3/NOPB	ACTIVE	PDIP	P	8	40	Green (RoHS & no Sb/Br)	SN	Level-1-NA-UNLIM	-40 to 125	LM2594HV N-3.3 P+	Samples
LM2594HVN-5.0	ACTIVE	PDIP	P	8	40	TBD	Call TI	Call TI	-40 to 125	LM2594HV N-5.0 P+	Samples
LM2594HVN-5.0/NOPB	ACTIVE	PDIP	P	8	40	Green (RoHS & no Sb/Br)	SN	Level-1-NA-UNLIM	-40 to 125	LM2594HV N-5.0 P+	Samples
LM2594HVN-ADJ	ACTIVE	PDIP	P	8	40	TBD	Call TI	Call TI	-40 to 125	LM2594HV N-ADJ P+	Samples
LM2594HVN-ADJ/NOPB	ACTIVE	PDIP	P	8	40	Green (RoHS & no Sb/Br)	SN	Level-1-NA-UNLIM	-40 to 125	LM2594HV N-ADJ P+	Samples
LM2594M-12	ACTIVE	SOIC	D	8	95	TBD	Call TI	Call TI	-40 to 125	2594 M-12	Samples
LM2594M-12/NOPB	ACTIVE	SOIC	D	8	95	Green (RoHS & no Sb/Br)	CU SN	Level-1-260C-UNLIM	-40 to 125	2594 M-12	Samples
LM2594M-3.3	ACTIVE	SOIC	D	8	95	TBD	Call TI	Call TI	-40 to 125	2594 M-3.3	Samples
LM2594M-3.3/NOPB	ACTIVE	SOIC	D	8	95	Green (RoHS & no Sb/Br)	CU SN	Level-1-260C-UNLIM	-40 to 125	2594 M-3.3	Samples
LM2594M-5.0	ACTIVE	SOIC	D	8	95	TBD	Call TI	Call TI	-40 to 125	2594 M-5.0	Samples
LM2594M-5.0/NOPB	ACTIVE	SOIC	D	8	95	Green (RoHS & no Sb/Br)	CU SN	Level-1-260C-UNLIM	-40 to 125	2594 M-5.0	Samples
LM2594M-ADJ/NOPB	ACTIVE	SOIC	D	8	95	Green (RoHS & no Sb/Br)	CU SN	Level-1-260C-UNLIM	-40 to 125	2594 M-ADJ	Samples
LM2594MX-12	ACTIVE	SOIC	D	8	2500	TBD	Call TI	Call TI	-40 to 125	2594 M-12	Samples
LM2594MX-12/NOPB	ACTIVE	SOIC	D	8	2500	Green (RoHS & no Sb/Br)	CU SN	Level-1-260C-UNLIM	-40 to 125	2594 M-12	Samples
LM2594MX-3.3	ACTIVE	SOIC	D	8	2500	TBD	Call TI	Call TI	-40 to 125	2594 M-3.3	Samples
LM2594MX-3.3/NOPB	ACTIVE	SOIC	D	8	2500	Green (RoHS & no Sb/Br)	CU SN	Level-1-260C-UNLIM	-40 to 125	2594 M-3.3	Samples
LM2594MX-5.0/NOPB	ACTIVE	SOIC	D	8	2500	Green (RoHS & no Sb/Br)	CU SN	Level-1-260C-UNLIM	-40 to 125	2594 M-5.0	Samples

Orderable Device	Status (1)	Package Type	Package Drawing	Pins	Package Qty	Eco Plan (2)	Lead/Ball Finish	MSL Peak Temp (3)	Op Temp (°C)	Top-Side Markings (4)	Samples
LM2594MX-ADJ	ACTIVE	SOIC	D	8	2500	TBD	Call TI	Call TI	-40 to 125	2594 M-ADJ	Samples
LM2594MX-ADJ/NOPB	ACTIVE	SOIC	D	8	2500	Green (RoHS & no Sb/Br)	CU SN	Level-1-260C-UNLIM	-40 to 125	2594 M-ADJ	Samples
LM2594N-12	ACTIVE	PDIP	P	8	40	TBD	Call TI	Call TI	-40 to 125	LM2594N -12 P+	Samples
LM2594N-12/NOPB	ACTIVE	PDIP	P	8	40	Green (RoHS & no Sb/Br)	Call TI	Level-1-NA-UNLIM	-40 to 125	LM2594N -12 P+	Samples
LM2594N-3.3	ACTIVE	PDIP	P	8	40	TBD	Call TI	Call TI	-40 to 125	LM2594N -3.3 P+	Samples
LM2594N-3.3/NOPB	ACTIVE	PDIP	P	8	40	Green (RoHS & no Sb/Br)	Call TI	Level-1-NA-UNLIM	-40 to 125	LM2594N -3.3 P+	Samples
LM2594N-5.0	ACTIVE	PDIP	P	8	40	TBD	Call TI	Call TI	-40 to 125	LM2594N -5.0 P+	Samples
LM2594N-5.0/NOPB	ACTIVE	PDIP	P	8	40	Green (RoHS & no Sb/Br)	SN	Level-1-NA-UNLIM	-40 to 125	LM2594N -5.0 P+	Samples
LM2594N-ADJ	ACTIVE	PDIP	P	8	40	TBD	Call TI	Call TI	-40 to 125	LM2594N -ADJ P+	Samples
LM2594N-ADJ/NOPB	ACTIVE	PDIP	P	8	40	Green (RoHS & no Sb/Br)	SN	Level-1-NA-UNLIM	-40 to 125	LM2594N -ADJ P+	Samples

(1) The marketing status values are defined as follows:
ACTIVE: Product device recommended for new designs.
LIFEBUY: TI has announced that the device will be discontinued, and a lifetime-buy period is in effect.
NRND: Not recommended for new designs. Device is in production to support existing customers, but TI does not recommend using this part in a new design.
PREVIEW: Device has been announced but is not in production. Samples may or may not be available.
OBSOLETE: TI has discontinued the production of the device.

(2) Eco Plan - The planned eco-friendly classification: Pb-Free (RoHS), Pb-Free (RoHS Exempt), or Green (RoHS & no Sb/Br) - please check http://www.ti.com/productcontent for the latest availability information and additional product content details.
TBD: The Pb-Free/Green conversion plan has not been defined.
Pb-Free (RoHS): TI's terms "Lead-Free" or "Pb-Free" mean semiconductor products that are compatible with the current RoHS requirements for all 6 substances, including the requirement that lead not exceed 0.1% by weight in homogeneous materials. Where designed to be soldered at high temperatures, TI Pb-Free products are suitable for use in specified lead-free processes.
Pb-Free (RoHS Exempt): This component has a RoHS exemption for either 1) lead-based flip-chip solder bumps used between the die and package, or 2) lead-based die adhesive used between the die and leadframe. The component is otherwise considered Pb-Free (RoHS compatible) as defined above.
Green (RoHS & no Sb/Br): TI defines "Green" to mean Pb-Free (RoHS compatible), and free of Bromine (Br) and Antimony (Sb) based flame retardants (Br or Sb do not exceed 0.1% by weight in homogeneous material)

(3) MSL, Peak Temp. -- The Moisture Sensitivity Level rating according to the JEDEC industry standard classifications, and peak solder temperature.

(4) Multiple Top-Side Markings will be inside parentheses. Only one Top-Side Marking contained in parentheses and separated by a "~" will appear on a device. If a line is indented then it is a continuation of the previous line and the two combined represent the entire Top-Side Marking for that device.

Important Information and Disclaimer: The information provided on this page represents TI's knowledge and belief as of the date that it is provided. TI bases its knowledge and belief on information provided by third parties, and makes no representation or warranty as to the accuracy of such information. Efforts are underway to better integrate information from third parties. TI has taken and continues to take reasonable steps to provide representative and accurate information but may not have conducted destructive testing or chemical analysis on incoming materials and chemicals. TI and TI suppliers consider certain information to be proprietary, and thus CAS numbers and other limited information may not be available for release.

In no event shall TI's liability arising out of such information exceed the total purchase price of the TI part(s) at issue in this document sold by TI to Customer on an annual basis.

TAPE AND REEL INFORMATION

REEL DIMENSIONS

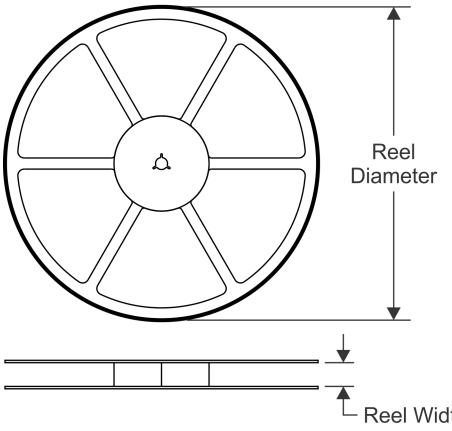

TAPE DIMENSIONS

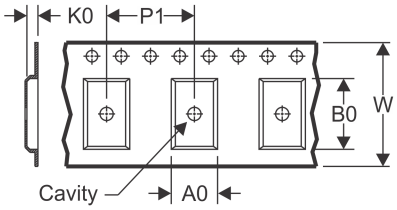

A0	Dimension designed to accommodate the component width
B0	Dimension designed to accommodate the component length
K0	Dimension designed to accommodate the component thickness
W	Overall width of the carrier tape
P1	Pitch between successive cavity centers

QUADRANT ASSIGNMENTS FOR PIN 1 ORIENTATION IN TAPE

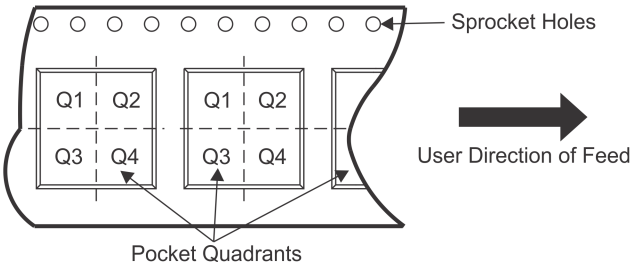

*All dimensions are nominal

Device	Package Type	Package Drawing	Pins	SPQ	Reel Diameter (mm)	Reel Width W1 (mm)	A0 (mm)	B0 (mm)	K0 (mm)	P1 (mm)	W (mm)	Pin1 Quadrant
LM2594HVMX-12	SOIC	D	8	2500	330.0	12.4	6.5	5.4	2.0	8.0	12.0	Q1
LM2594HVMX-12/NOPB	SOIC	D	8	2500	330.0	12.4	6.5	5.4	2.0	8.0	12.0	Q1
LM2594HVMX-3.3	SOIC	D	8	2500	330.0	12.4	6.5	5.4	2.0	8.0	12.0	Q1
LM2594HVMX-3.3/NOPB	SOIC	D	8	2500	330.0	12.4	6.5	5.4	2.0	8.0	12.0	Q1
LM2594HVMX-5.0	SOIC	D	8	2500	330.0	12.4	6.5	5.4	2.0	8.0	12.0	Q1
LM2594HVMX-5.0/NOPB	SOIC	D	8	2500	330.0	12.4	6.5	5.4	2.0	8.0	12.0	Q1
LM2594HVMX-ADJ/NOPB	SOIC	D	8	2500	330.0	12.4	6.5	5.4	2.0	8.0	12.0	Q1
LM2594MX-12	SOIC	D	8	2500	330.0	12.4	6.5	5.4	2.0	8.0	12.0	Q1
LM2594MX-12/NOPB	SOIC	D	8	2500	330.0	12.4	6.5	5.4	2.0	8.0	12.0	Q1
LM2594MX-3.3	SOIC	D	8	2500	330.0	12.4	6.5	5.4	2.0	8.0	12.0	Q1
LM2594MX-3.3/NOPB	SOIC	D	8	2500	330.0	12.4	6.5	5.4	2.0	8.0	12.0	Q1
LM2594MX-5.0/NOPB	SOIC	D	8	2500	330.0	12.4	6.5	5.4	2.0	8.0	12.0	Q1
LM2594MX-ADJ	SOIC	D	8	2500	330.0	12.4	6.5	5.4	2.0	8.0	12.0	Q1
LM2594MX-ADJ/NOPB	SOIC	D	8	2500	330.0	12.4	6.5	5.4	2.0	8.0	12.0	Q1

TAPE AND REEL BOX DIMENSIONS

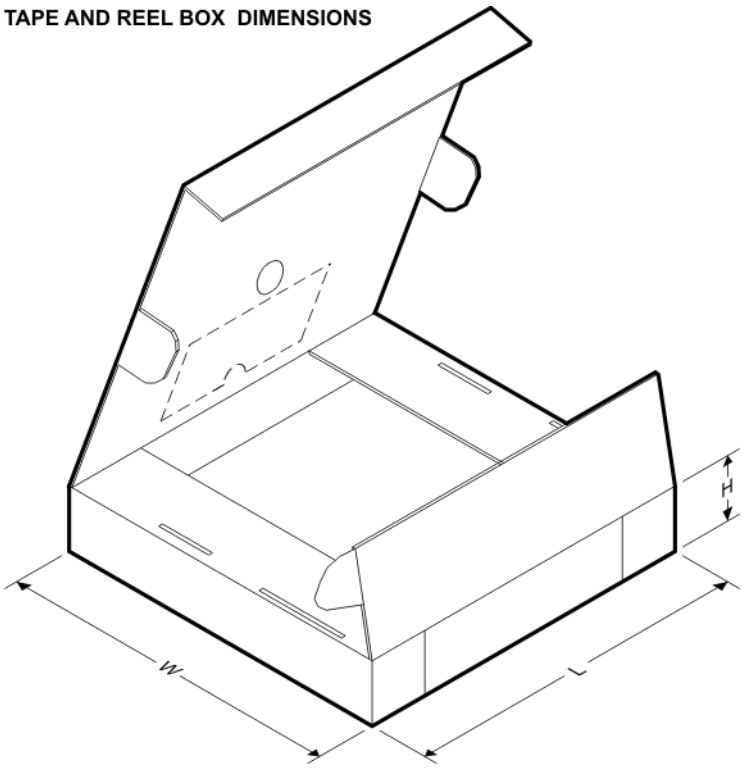

*All dimensions are nominal

Device	Package Type	Package Drawing	Pins	SPQ	Length (mm)	Width (mm)	Height (mm)
LM2594HVMX-12	SOIC	D	8	2500	349.0	337.0	45.0
LM2594HVMX-12/NOPB	SOIC	D	8	2500	349.0	337.0	45.0
LM2594HVMX-3.3	SOIC	D	8	2500	349.0	337.0	45.0
LM2594HVMX-3.3/NOPB	SOIC	D	8	2500	349.0	337.0	45.0
LM2594HVMX-5.0	SOIC	D	8	2500	349.0	337.0	45.0
LM2594HVMX-5.0/NOPB	SOIC	D	8	2500	349.0	337.0	45.0
LM2594HVMX-ADJ/NOPB	SOIC	D	8	2500	349.0	337.0	45.0
LM2594MX-12	SOIC	D	8	2500	349.0	337.0	45.0
LM2594MX-12/NOPB	SOIC	D	8	2500	349.0	337.0	45.0
LM2594MX-3.3	SOIC	D	8	2500	349.0	337.0	45.0
LM2594MX-3.3/NOPB	SOIC	D	8	2500	349.0	337.0	45.0
LM2594MX-5.0/NOPB	SOIC	D	8	2500	349.0	337.0	45.0
LM2594MX-ADJ	SOIC	D	8	2500	349.0	337.0	45.0
LM2594MX-ADJ/NOPB	SOIC	D	8	2500	349.0	337.0	45.0

P (R–PDIP–T8) PLASTIC DUAL–IN–LINE PACKAGE

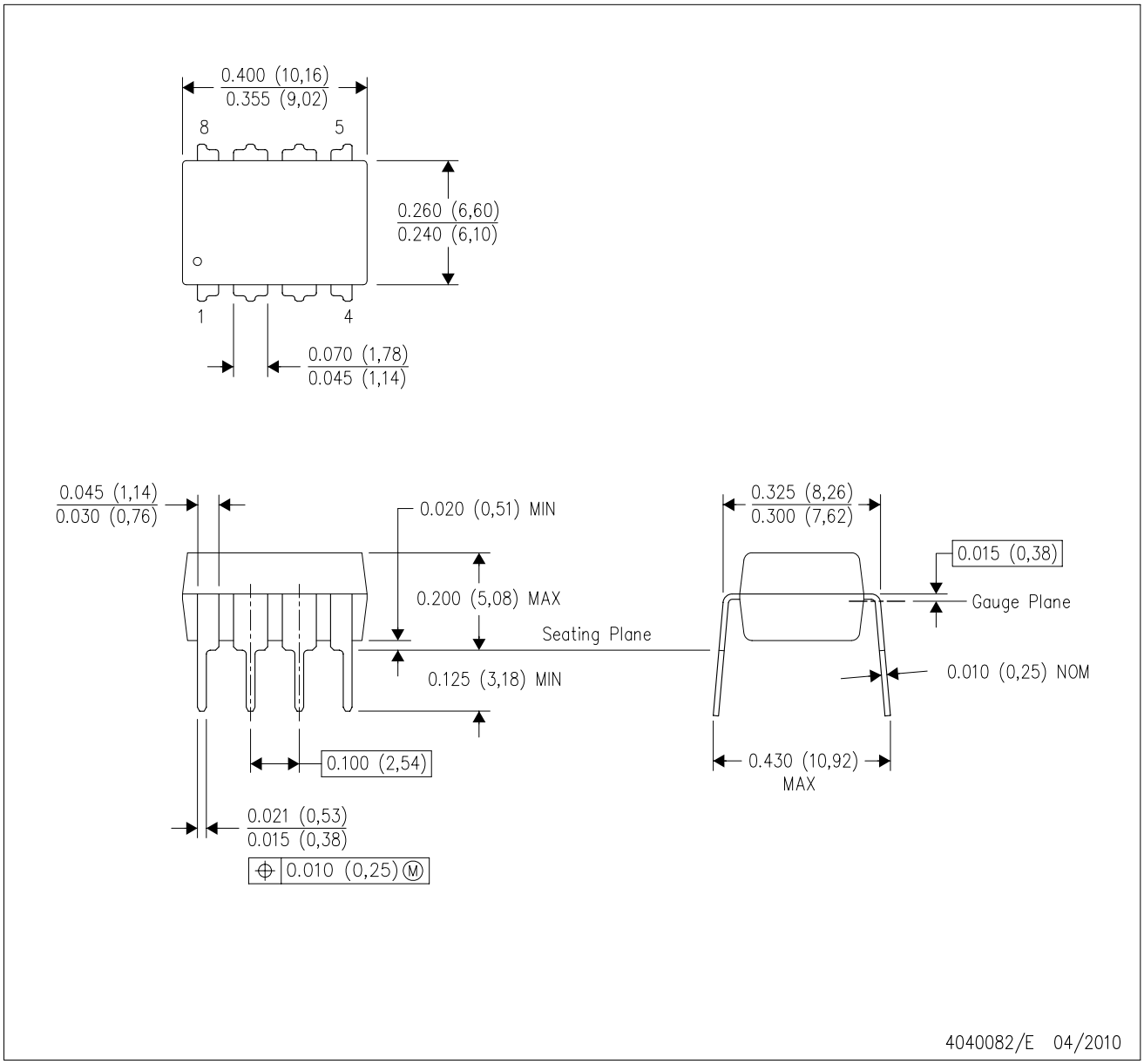

NOTES:
A. All linear dimensions are in inches (millimeters).
B. This drawing is subject to change without notice.
C. Falls within JEDEC MS–001 variation BA.

D (R–PDSO–G8) PLASTIC SMALL OUTLINE

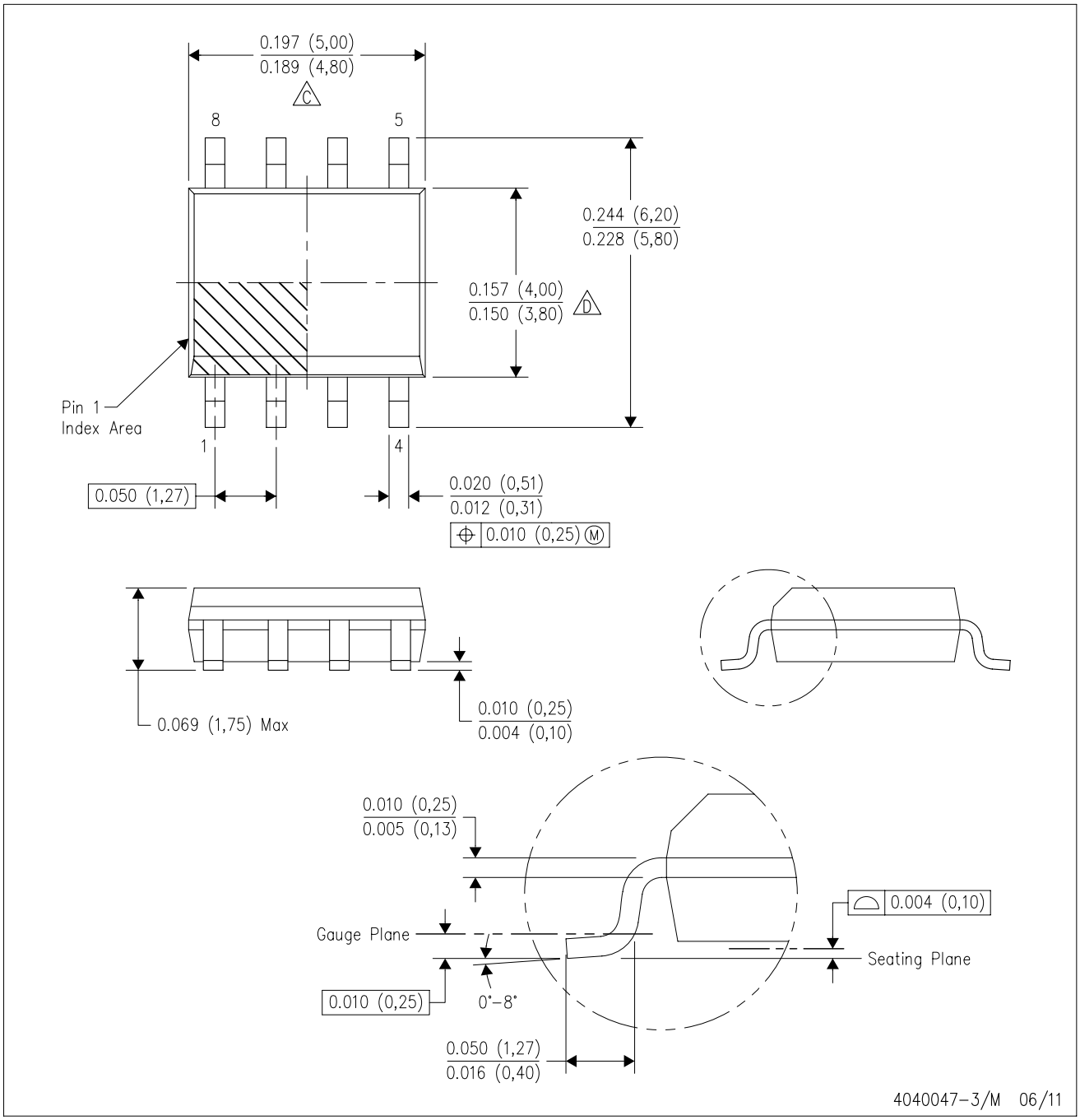

NOTES:
A. All linear dimensions are in inches (millimeters).
B. This drawing is subject to change without notice.
C. Body length does not include mold flash, protrusions, or gate burrs. Mold flash, protrusions, or gate burrs shall not exceed 0.006 (0,15) each side.
D. Body width does not include interlead flash. Interlead flash shall not exceed 0.017 (0,43) each side.
E. Reference JEDEC MS–012 variation AA.

IMPORTANT NOTICE

Texas Instruments Incorporated and its subsidiaries (TI) reserve the right to make corrections, enhancements, improvements and other changes to its semiconductor products and services per JESD46, latest issue, and to discontinue any product or service per JESD48, latest issue. Buyers should obtain the latest relevant information before placing orders and should verify that such information is current and complete. All semiconductor products (also referred to herein as “components”) are sold subject to TI’s terms and conditions of sale supplied at the time of order acknowledgment.

TI warrants performance of its components to the specifications applicable at the time of sale, in accordance with the warranty in TI’s terms and conditions of sale of semiconductor products. Testing and other quality control techniques are used to the extent TI deems necessary to support this warranty. Except where mandated by applicable law, testing of all parameters of each component is not necessarily performed.

TI assumes no liability for applications assistance or the design of Buyers’ products. Buyers are responsible for their products and applications using TI components. To minimize the risks associated with Buyers’ products and applications, Buyers should provide adequate design and operating safeguards.

TI does not warrant or represent that any license, either express or implied, is granted under any patent right, copyright, mask work right, or other intellectual property right relating to any combination, machine, or process in which TI components or services are used. Information published by TI regarding third-party products or services does not constitute a license to use such products or services or a warranty or endorsement thereof. Use of such information may require a license from a third party under the patents or other intellectual property of the third party, or a license from TI under the patents or other intellectual property of TI.

Reproduction of significant portions of TI information in TI data books or data sheets is permissible only if reproduction is without alteration and is accompanied by all associated warranties, conditions, limitations, and notices. TI is not responsible or liable for such altered documentation. Information of third parties may be subject to additional restrictions.

Resale of TI components or services with statements different from or beyond the parameters stated by TI for that component or service voids all express and any implied warranties for the associated TI component or service and is an unfair and deceptive business practice. TI is not responsible or liable for any such statements.

Buyer acknowledges and agrees that it is solely responsible for compliance with all legal, regulatory and safety-related requirements concerning its products, and any use of TI components in its applications, notwithstanding any applications-related information or support that may be provided by TI. Buyer represents and agrees that it has all the necessary expertise to create and implement safeguards which anticipate dangerous consequences of failures, monitor failures and their consequences, lessen the likelihood of failures that might cause harm and take appropriate remedial actions. Buyer will fully indemnify TI and its representatives against any damages arising out of the use of any TI components in safety-critical applications.

In some cases, TI components may be promoted specifically to facilitate safety-related applications. With such components, TI’s goal is to help enable customers to design and create their own end-product solutions that meet applicable functional safety standards and requirements. Nonetheless, such components are subject to these terms.

No TI components are authorized for use in FDA Class III (or similar life-critical medical equipment) unless authorized officers of the parties have executed a special agreement specifically governing such use.

Only those TI components which TI has specifically designated as military grade or “enhanced plastic” are designed and intended for use in military/aerospace applications or environments. Buyer acknowledges and agrees that any military or aerospace use of TI components which have ***not*** been so designated is solely at the Buyer's risk, and that Buyer is solely responsible for compliance with all legal and regulatory requirements in connection with such use.

TI has specifically designated certain components as meeting ISO/TS16949 requirements, mainly for automotive use. In any case of use of non-designated products, TI will not be responsible for any failure to meet ISO/TS16949.

Products		**Applications**	
Audio	www.ti.com/audio	Automotive and Transportation	www.ti.com/automotive
Amplifiers	amplifier.ti.com	Communications and Telecom	www.ti.com/communications
Data Converters	dataconverter.ti.com	Computers and Peripherals	www.ti.com/computers
DLP® Products	www.dlp.com	Consumer Electronics	www.ti.com/consumer-apps
DSP	dsp.ti.com	Energy and Lighting	www.ti.com/energy
Clocks and Timers	www.ti.com/clocks	Industrial	www.ti.com/industrial
Interface	interface.ti.com	Medical	www.ti.com/medical
Logic	logic.ti.com	Security	www.ti.com/security
Power Mgmt	power.ti.com	Space, Avionics and Defense	www.ti.com/space-avionics-defense
Microcontrollers	microcontroller.ti.com	Video and Imaging	www.ti.com/video
RFID	www.ti-rfid.com		
OMAP Applications Processors	www.ti.com/omap	**TI E2E Community**	e2e.ti.com
Wireless Connectivity	www.ti.com/wirelessconnectivity		

Mailing Address: Texas Instruments, Post Office Box 655303, Dallas, Texas 75265
Copyright © 2013, Texas Instruments Incorporated