LP2980-ADJ Micropower 50 mA Ultra Low-Dropout Adjustable Voltage Regulator in SOT-23

Check for Samples: LP2980-ADJ

FEATURES

- **Ultra Low Dropout Voltage**
- **Output Adjusts from 1.23V to 15V**
- **Specified 50 mA Output Current**
- **Uses Tiny SOT-23 Package**
- **Requires Few External Components**
- **<1 µA Quiescent Current when Shutdown**
- **Low Ground Pin Current at All Loads**
- **High Peak Current Capability (150 mA Typical)**
- **Wide Supply Voltage Range (2.5V–16V)**
- **Overtemperature/overcurrent Protection**
- **−40°C to +125°C Junction Temperature Range**

APPLICATIONS

- **Cellular Phone**
- **Palmtop/Laptop Computer**
- **Camcorder, Personal Stereo, Camera**

DESCRIPTION

The LP2980-ADJ is a 50 mA adjustable voltage regulator designed to provide ultra low dropout in battery powered applications.

Using an optimized VIP (vertically Integrated PNP) process, the LP2980-ADJ delivers unequaled performance in all specifications critical to battery-powered designs:

Adjustable Output: output voltage can be set from 1.23V to 15V.

Precision Reference: 1.0% tolerance.

Dropout Voltage: typically 120 mV @ 50 mA load, and 7 mV @ 1 mA load.

Ground Pin Current: typically 320 µA @ 50 mA load, and 80 µA @ 1 mA load.

Sleep Mode: less than 1 µA quiescent current when on/off pin is pulled low.

Smallest Possible Size: Package uses minimum board space.

Block Diagram

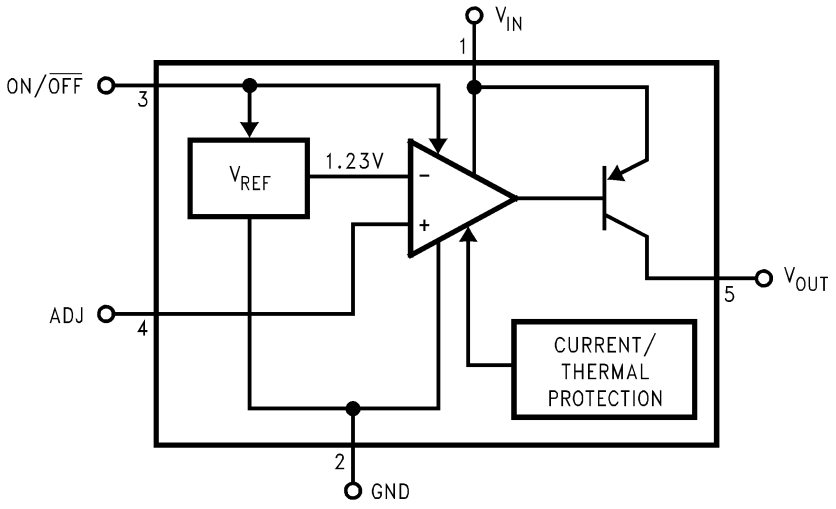

Please be aware that an important notice concerning availability, standard warranty, and use in critical applications of Texas Instruments semiconductor products and disclaimers thereto appears at the end of this data sheet.

All trademarks are the property of their respective owners.

PRODUCTION DATA information is current as of publication date. Products conform to specifications per the terms of the Texas Instruments standard warranty. Production processing does not necessarily include testing of all parameters.

Copyright © 2000–2013, Texas Instruments Incorporated

Connection Diagram

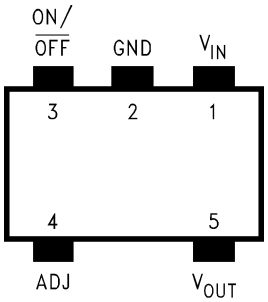

Figure 1. 5-Lead Small Outline Package
Top View
See Package Number DBV0005A

PIN DESCRIPTIONS

Name	Pin Number	Function
V_{IN}	1	Input Voltage
GND	2	Common Ground (device substrate)
ON/OFF	3	Logic high enable pin
ADJ	4	Output voltage feedback pin
V_{OUT}	5	Regulated output voltage

Copyright © 2000–2013, Texas Instruments Incorporated

These devices have limited built-in ESD protection. The leads should be shorted together or the device placed in conductive foam during storage or handling to prevent electrostatic damage to the MOS gates.

ABSOLUTE MAXIMUM RATINGS[1][2]

Storage Temperature Range	−65 to +150°C
Operating Junction Temperature Range	−40 to +125°C
Lead Temp. (Soldering, 5 seconds)	260°C
ESD Rating [3]	2 kV
Power Dissipation [4]	Internally Limited
Input Supply Voltage (Survival)	−0.3V to +16V
Input Supply Voltage (Operating)	2.5V to +16V
Shutdown Input Voltage (Survival)	−0.3V to +16V
Output Voltage (Survival) [5]	−0.3V to 16V
I_{OUT} (Survival)	Short Circuit Protected
Input-Output Voltage (Survival) [6]	−0.3V to 16V

(1) Absolute maximum ratings indicate limits beyond which damage to the component may occur. Electrical specifications do not apply when operating the device outside of its rated operating conditions.
(2) If Military/Aerospace specified devices are required, please contact the Texas Instruments Sales Office/Distributors for availability and specifications.
(3) The ESD rating of pins 3 and 4 is 1 kV.
(4) The maximum allowable power dissipation is a function of the maximum junction temperature, T_J(MAX), the junction-to-ambient thermal resistance, θ_{J-A}, and the ambient temperature, T_A. The maximum allowable power dissipation at any ambient temperature is calculated using: $P(MAX) = \frac{T_J(MAX) - T_A}{\theta_{J-A}}$. The value of θ_{J-A} for the SOT-23 package is 300°C/W. Exceeding the maximum allowable power dissipation will cause excessive die temperature, and the regulator will go into thermal shutdown.
(5) If used in a dual-supply system where the regulator load is returned to a negative supply, the LP2980-ADJ output must be diode-clamped to ground.
(6) The output PNP structure contains a diode between the V_{IN} and V_{OUT} terminals that is normally reverse-biased. Reversing the polarity from V_{IN} to V_{OUT} will turn on this diode (see APPLICATION HINTS).

ELECTRICAL CHARACTERISTICS

Limits in standard typeface are for T_J = 25°C, and limits in **boldface type** apply over the full operating temperature range. Unless otherwise specified: V_{IN} = 4.3V, V_{OUT} = 3.3V, I_L = 1 mA, C_{IN} = 1 µF, C_{OUT} = 2.2 µF, $V_{ON/OFF}$ = 2V.

Symbol	Parameter	Conditions	Typ	LP2980I-ADJ [1]		Units
				Min	Max	
V_{REF}	Reference Voltage		1.225	1.213	1.237	V
		1 mA < I_L < 50 mA V_{OUT} + 1 ≤ V_{IN} ≤ 16V	1.225	1.206 **1.182**	1.243 **1.268**	
$\Delta V_{REF}/\Delta V_{IN}$	Reference Voltage Line Regulation	2.5V ≤ V_{IN} ≤ 16V	3		6.0 **15.0**	mV
V_{IN}–V_O	Dropout Voltage [2]	I_L = 0	1		3 **5**	mV
		I_L = 1 mA	7		10 **15**	
		I_L = 10 mA	40		60 **90**	
		I_L = 50 mA	120		150 **225**	

(1) Limits are 100% production tested at 25°C. Limits over the operating temperature range are specified through correlation using Statistical Quality Control (SQC) methods. The limits are used to calculate TI's Average Outgoing Quality Level (AOQL).
(2) Dropout voltage is defined as the input to output differential at which the output voltage drops 100 mV below the value measured with a 1V differential.

Copyright © 2000–2013, Texas Instruments Incorporated

ELECTRICAL CHARACTERISTICS (continued)

Limits in standard typeface are for T_J = 25°C, and limits in **boldface type** apply over the full operating temperature range. Unless otherwise specified: V_{IN} = 4.3V, V_{OUT} = 3.3V, I_L = 1 mA, C_{IN} = 1 µF, C_{OUT} = 2.2 µF, $V_{ON/OFF}$ = 2V.

Symbol	Parameter	Conditions	Typ	LP2980I-ADJ (1)		Units
				Min	Max	
I_{GND}	Ground Pin Current	I_L = 0	60		95 **125**	µA
		I_L = 1 mA	80		110 **170**	
		I_L = 10 mA	120		220 **460**	
		I_L = 50 mA	320		600 **1200**	
		$V_{ON/OFF}$ < 0.18V	0.01		**1**	
I_{ADJ}	ADJ Pin Bias Current	1 mA ≤ I_L ≤ 50 mA	150		350	nA
$V_{ON/OFF}$	ON/OFF Input Voltage (3)	High = O/P ON	1.4	**1.6**		V
		Low = O/P OFF	0.55		**0.18**	
$I_{ON/OFF}$	ON/OFF Input Current	$V_{ON/OFF}$ = 0	0.01		**−1**	µA
		$V_{ON/OFF}$ = 5V	5		**15**	
I_O(PK)	Peak Output Current	V_{OUT} ≥ V_O(NOM) − 5%	150	100		mA
e_n	Output Noise Voltage (RMS)	BW = 300 Hz to 50 kHz, C_{OUT} = 10 µF	160			µV
$\Delta V_{OUT}/\Delta V_{IN}$	Ripple Rejection	f = 1 kHz C_{OUT} = 10 µF	68			dB
I_O(MAX)	Short Circuit Current	R_L = 0 (Steady State) (4)	150			mA

(3) The ON/OFF input must be properly driven to prevent possible misoperation. For details, refer to APPLICATION HINTS.
(4) See TYPICAL PERFORMANCE CHARACTERISTICS curves.

TYPICAL APPLICATION CIRCUIT

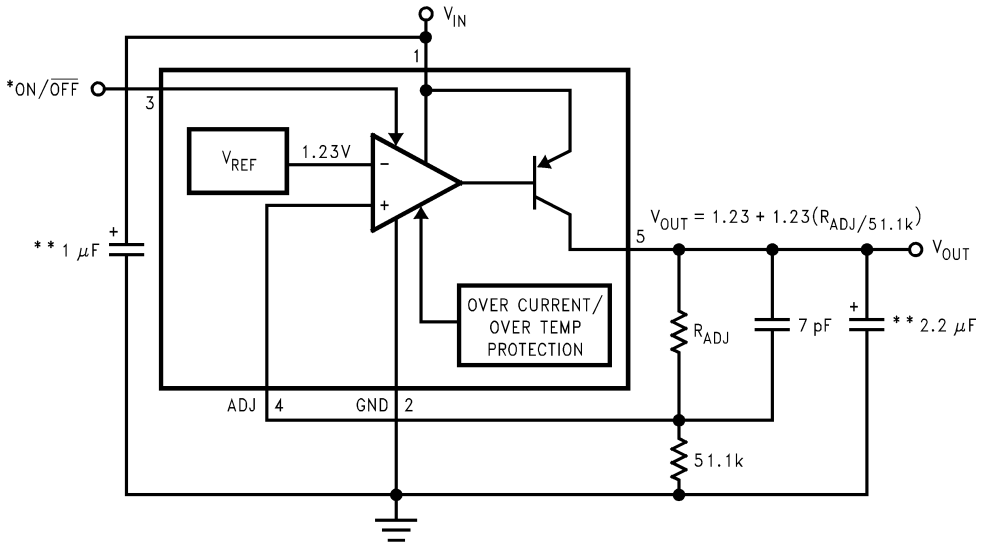

*ON/$\overline{OFF}$ INPUT MUST BE ACTIVELY TERMINATED. TIE TO V_{IN} IF THIS FUNCTION IS NOT TO BE USED.
**MINIMUM CAPACITANCE IS SHOWN TO ENSURE STABILITY OVER FULL LOAD CURRENT RANGE (SEE APPLICATION HINTS).

Copyright © 2000–2013, Texas Instruments Incorporated

TYPICAL PERFORMANCE CHARACTERISTICS

Unless otherwise specified: T_A = 25°C, V_{IN} = V_O(NOM) + 1V, I_L = 1 mA, ON/OFF pin tied to V_{IN}, R_{ADJ} = 86.6k, and test circuit is as shown in Basic Application Circuit.

Output Voltage vs. Temperature

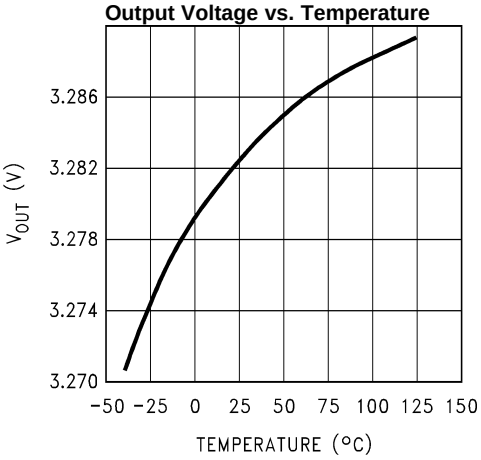

Figure 2.

Dropout Characteristics

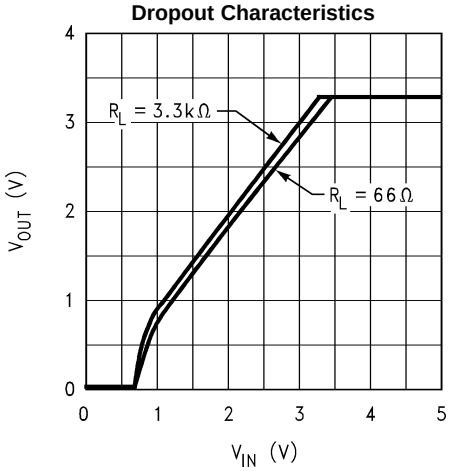

Figure 3.

Dropout Voltage vs. Temperature

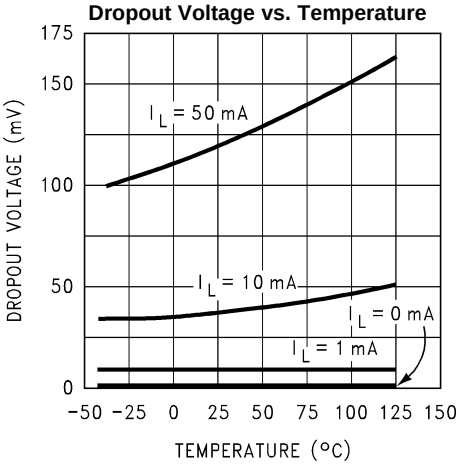

Figure 4.

Dropout Voltage vs. Load Current

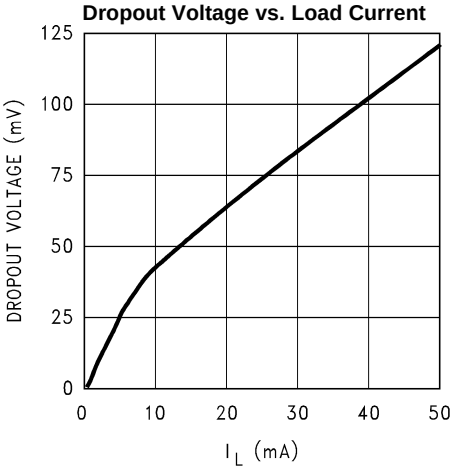

Figure 5.

Ground Pin Current vs. Temperature

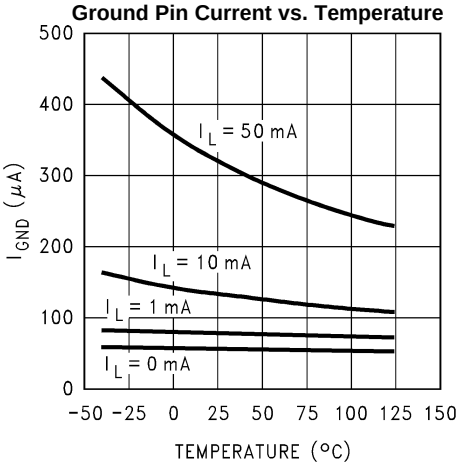

Figure 6.

Ground Pin Current vs. Load Current

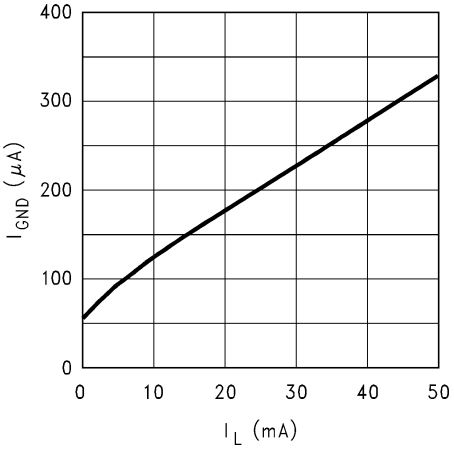

Figure 7.

Copyright © 2000–2013, Texas Instruments Incorporated

TYPICAL PERFORMANCE CHARACTERISTICS (continued)

Unless otherwise specified: T_A = 25°C, V_{IN} = V_O(NOM) + 1V, I_L = 1 mA, ON/OFF pin tied to V_{IN}, R_{ADJ} = 86.6k, and test circuit is as shown in Basic Application Circuit.

Input Current vs. V_{IN}

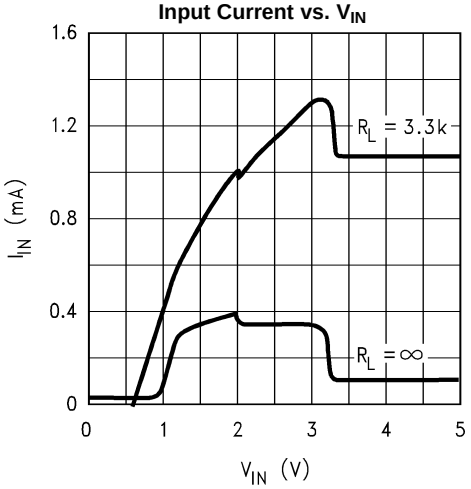

Figure 8.

Load Transient Response

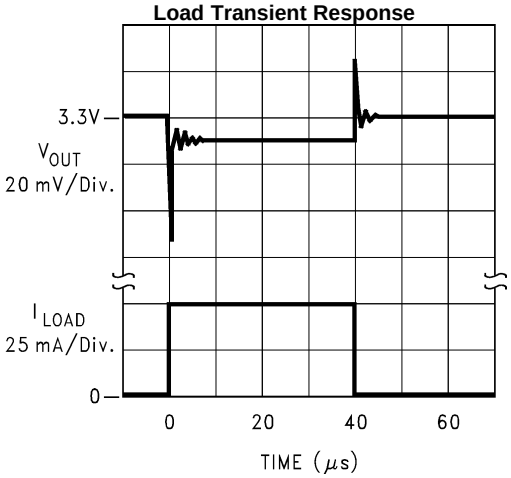

Figure 9.

Line Transient Response

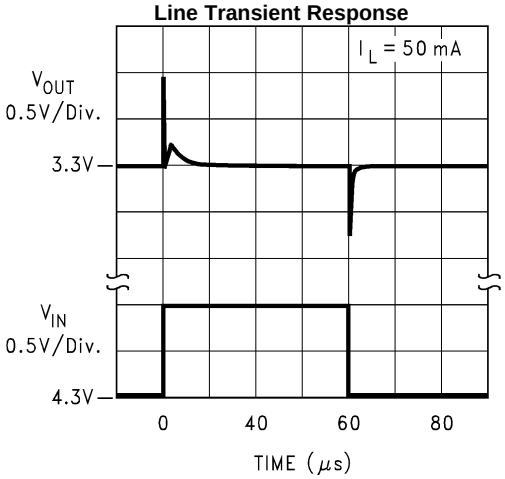

Figure 10.

Short Circuit Current

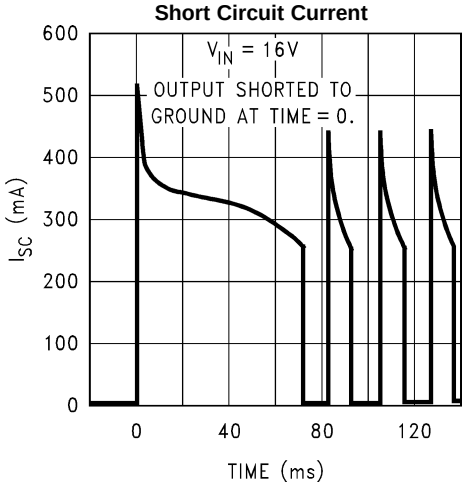

Figure 11.

Short Circuit Current

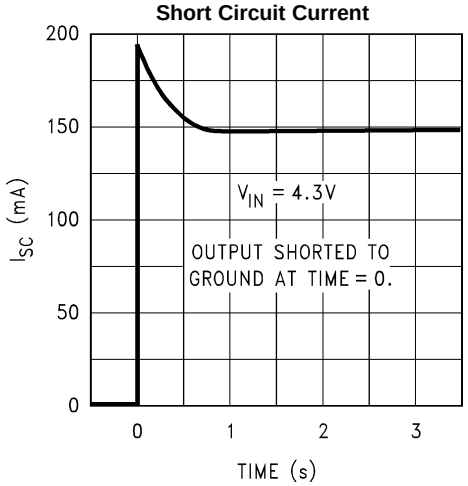

Figure 12.

Load Regulation

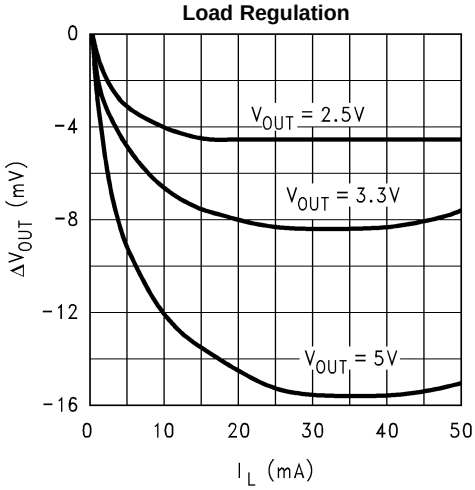

Figure 13.

Copyright © 2000–2013, Texas Instruments Incorporated

TYPICAL PERFORMANCE CHARACTERISTICS (continued)

Unless otherwise specified: T_A = 25°C, V_{IN} = V_O(NOM) + 1V, I_L = 1 mA, ON/OFF pin tied to V_{IN}, R_{ADJ} = 86.6k, and test circuit is as shown in Basic Application Circuit.

ADJ Pin Bias Current vs. Load Current

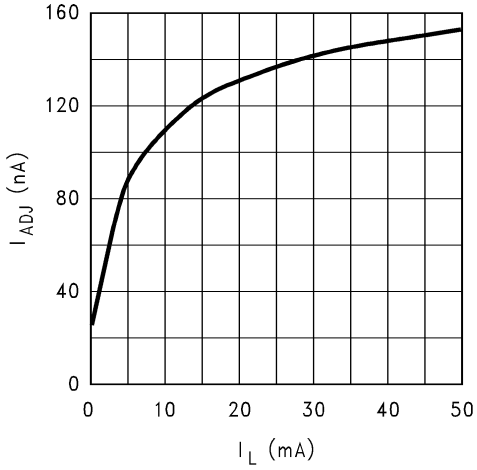

Figure 14.

ADJ Pin Bias Current vs. Temperature

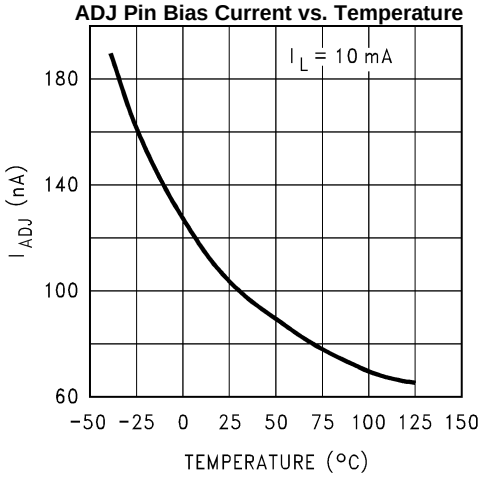

Figure 15.

ON/OFF Threshold vs.Temperature

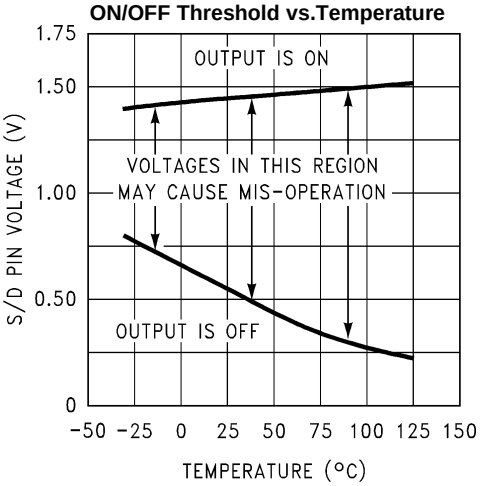

Figure 16.

Output Noise Density

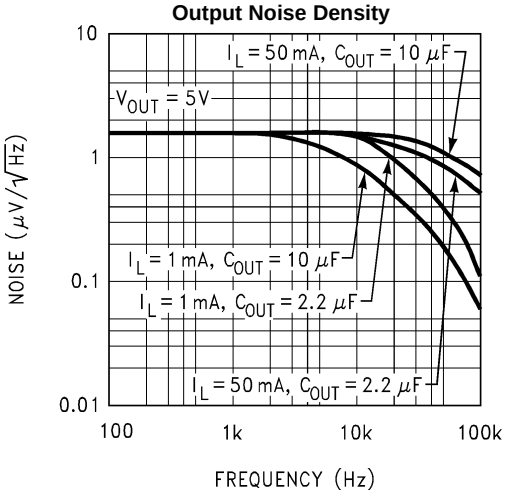

Figure 17.

Ripple Rejection

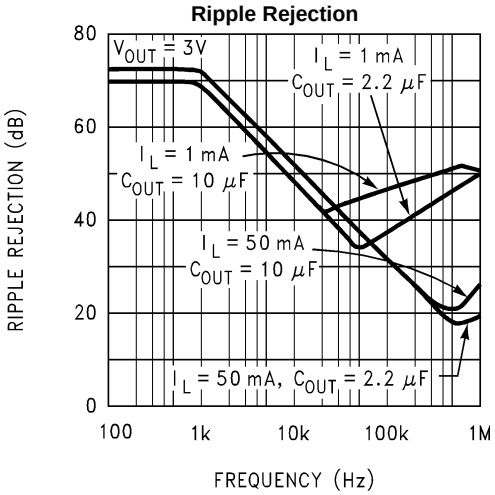

Figure 18.

APPLICATION HINTS

EXTERNAL CAPACITORS

Like any low-dropout regulator, the external capacitors must be selected carefully to assure regulator loop stability.

INPUT CAPACITOR: An input capacitor whose value is ≥1 µF is *required* (the amount of capacitance may be increased without limit).

Any good quality Tantalum or Ceramic capacitor may be used here. The capacitor must be located not more than 0.5″ from the input pin and returned to a clean analog ground.

OUTPUT CAPACITOR: The output capacitor must meet both the requirement for minimum amount of capacitance and E.S.R. (Equivalent Series Resistance) for stable operation.

Curves are provided below which show the allowable ESR of the output capacitor as a function of load current for both 2.2 µF and 4.7 µF. A solid Tantalum capacitor is the best choice for the output.

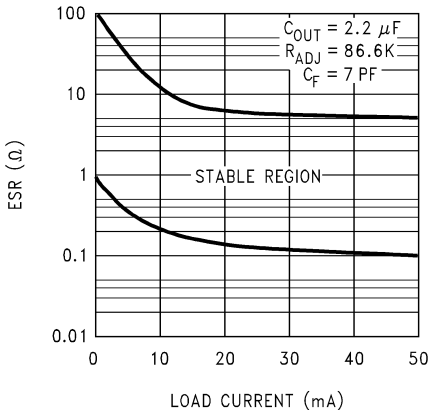

Figure 19. 2.2 µF ESR Curves

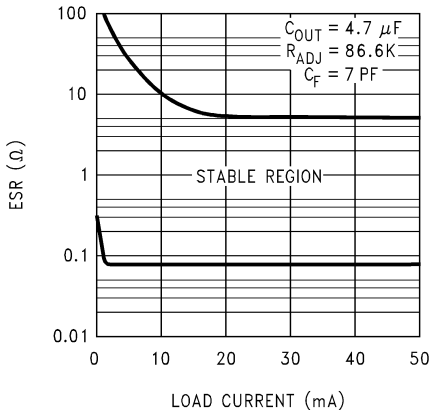

Figure 20. 4.7 µF ESR Curves

IMPORTANT: The output capacitor must maintain its ESR in the stable region *over the full operating temperature range* to assure stability. Also, capacitor tolerance and variation with temperature must be considered to assure the minimum amount of capacitance is provided at all times.

Note that this capacitor must be located not more than 0.5” from the output pin and returned to a clean analog ground.

FEED-FORWARD CAPACITOR: A 7 pF feed-forward capacitor is required (see Basic Application Circuit). The function of this capacitor is to provide the lead compensation necessary for loop stability.

A temperature-stable ceramic capacitor (type NPO or COG) should be used here.

CAPACITOR CHARACTERISTICS

TANTALUM: The best capacitor choice for the LP2980-ADJ output is solid Tantalum. The ESR of a good quality Tantalum is almost perfectly centered in the middle of the “stable” range of the ESR curve (about 0.5Ω–1Ω).

The temperature stability of Tantalums is typically very good, with a total variation of only about 2:1 over the temperature range of −40°C to +125°C (ESR increases at colder temperatures).

Off-brand capacitors should be avoided, as some poor quality Tantalums are seen with ESR's > 10Ω, and this usually causes oscillation problems.

One caution about Tantalums if they are used on the input: the ESR of a Tantalum is low enough that it can be destroyed by surge current if powered up from a low impedance source (like a battery) that has no limit on inrush current. In these cases, use a ceramic input capacitor which does not have this problem.

CERAMIC: Ceramics are generally larger and more costly than Tantalums for a given amount of capacitance. Also, they have a very low ESR which is quite stable with temperature.

Copyright © 2000–2013, Texas Instruments Incorporated

Be warned that the ESR of a ceramic capacitor is typically low enough to make an LDO oscillate: a 2.2 µF ceramic demonstrated an ESR of about 15 mΩ when tested. If used as an output capacitor, this will cause instability (see ESR Curves).

If a ceramic is used on the output of an LDO, a small resistance (about 1Ω) should be placed in series with the capacitor. If it is used as an input capacitor, no resistor is needed as there is no requirement for ESR on capacitors used on the input.

EXTERNAL RESISTORS

The output voltage is set using two external resistors (see Basic Application Circuit). It is recommended that the resistor from the ADJ pin to ground be 51.1 kΩ.

The other resistor (R_{ADJ}) which connects between V_{OUT} and the ADJ pin is selected to set V_{OUT} as given by the formula:

$$V_{OUT} = V_{REF} + (V_{REF} \times (R_{ADJ} / 51.1\ k\Omega))$$

REVERSE CURRENT PATH

The PNP power transistor used as the pass element in the LP2980-ADJ has an inherent diode connected between the regulator output and input. During normal operation (where the input voltage is higher than the output) this diode is reverse biased (See Figure 21).

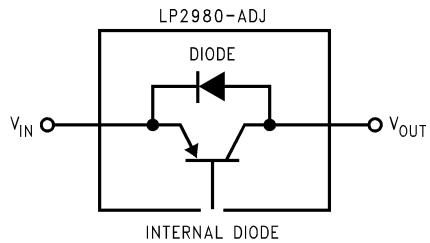

Figure 21. LP2980–ADJ Reverse Current Path

However, if the input voltage is more than a V_{BE}below the output voltage, this diode will turn ON and current will flow into the regulator output. In such cases, a parasitic SCR can latch which will allow a high current to flow into the V_{IN} pin and out the ground pin, which can damage the part.

The internal diode can also be turned on if the input voltage is abruptly stepped down to a voltage which is a V_{BE} below the output voltage.

In any application where the output may be pulled above the input, an external Schottky diode must be connected from V_{IN} to V_{OUT} (cathode on V_{IN}, anode on V_{OUT}. See Figure 22), to limit the reverse voltage across the LP2980-ADJ to 0.3V (see Absolute Maximum Ratings).

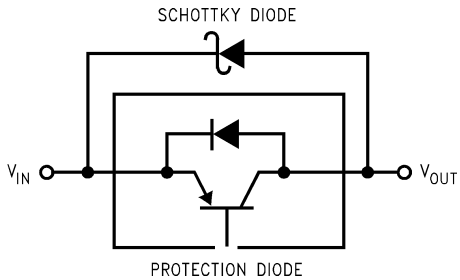

Figure 22. Adding External Schottky Diode Protection

ON/OFF INPUT OPERATION

The LP2980-ADJ is shut off by driving the ON/OFF input low, and turned on by pulling the ON/OFF input high. If this feature is not to be used, the ON/OFF input must be tied to V_{IN} to keep the regulator output on at all times (the ON/OFF input must not be left floating).

To ensure proper operation, the signal source used to drive the ON/OFF input must be able to swing above and below the specified turn-on/turn-off voltage thresholds which specify an ON or OFF state (see Electrical Characteristics).

It is also important that the turn-on (and turn-off) voltage signals applied to the ON/OFF input have a slew rate which is greater than 40 mV/µs.

IMPORTANT: The ON/OFF function will not operate correctly if a slow-moving signal is used to drive the ON/OFF input.

 Copyright © 2000–2013, Texas Instruments Incorporated

REVISION HISTORY

Changes from Revision D (April 2013) to Revision E	Page
• Changed layout of National Data Sheet to TI format	10

PACKAGING INFORMATION

Orderable Device	Status (1)	Package Type	Package Drawing	Pins	Package Qty	Eco Plan (2)	Lead/Ball Finish	MSL Peak Temp (3)	Op Temp (°C)	Top-Side Markings (4)	Samples
LP2980IM5-ADJ	ACTIVE	SOT-23	DBV	5	1000	TBD	Call TI	Call TI	-40 to 125	L06B	Samples
LP2980IM5-ADJ/NOPB	ACTIVE	SOT-23	DBV	5	1000	Green (RoHS & no Sb/Br)	CU SN	Level-1-260C-UNLIM	-40 to 125	L06B	Samples
LP2980IM5X-ADJ	ACTIVE	SOT-23	DBV	5	3000	TBD	Call TI	Call TI	-40 to 125	L06B	Samples
LP2980IM5X-ADJ/NOPB	ACTIVE	SOT-23	DBV	5	3000	Green (RoHS & no Sb/Br)	CU SN	Level-1-260C-UNLIM	-40 to 125	L06B	Samples

(1) The marketing status values are defined as follows:
ACTIVE: Product device recommended for new designs.
LIFEBUY: TI has announced that the device will be discontinued, and a lifetime-buy period is in effect.
NRND: Not recommended for new designs. Device is in production to support existing customers, but TI does not recommend using this part in a new design.
PREVIEW: Device has been announced but is not in production. Samples may or may not be available.
OBSOLETE: TI has discontinued the production of the device.

(2) Eco Plan - The planned eco-friendly classification: Pb-Free (RoHS), Pb-Free (RoHS Exempt), or Green (RoHS & no Sb/Br) - please check http://www.ti.com/productcontent for the latest availability information and additional product content details.
TBD: The Pb-Free/Green conversion plan has not been defined.
Pb-Free (RoHS): TI's terms "Lead-Free" or "Pb-Free" mean semiconductor products that are compatible with the current RoHS requirements for all 6 substances, including the requirement that lead not exceed 0.1% by weight in homogeneous materials. Where designed to be soldered at high temperatures, TI Pb-Free products are suitable for use in specified lead-free processes.
Pb-Free (RoHS Exempt): This component has a RoHS exemption for either 1) lead-based flip-chip solder bumps used between the die and package, or 2) lead-based die adhesive used between the die and leadframe. The component is otherwise considered Pb-Free (RoHS compatible) as defined above.
Green (RoHS & no Sb/Br): TI defines "Green" to mean Pb-Free (RoHS compatible), and free of Bromine (Br) and Antimony (Sb) based flame retardants (Br or Sb do not exceed 0.1% by weight in homogeneous material)

(3) MSL, Peak Temp. -- The Moisture Sensitivity Level rating according to the JEDEC industry standard classifications, and peak solder temperature.

(4) Multiple Top-Side Markings will be inside parentheses. Only one Top-Side Marking contained in parentheses and separated by a "~" will appear on a device. If a line is indented then it is a continuation of the previous line and the two combined represent the entire Top-Side Marking for that device.

Important Information and Disclaimer: The information provided on this page represents TI's knowledge and belief as of the date that it is provided. TI bases its knowledge and belief on information provided by third parties, and makes no representation or warranty as to the accuracy of such information. Efforts are underway to better integrate information from third parties. TI has taken and continues to take reasonable steps to provide representative and accurate information but may not have conducted destructive testing or chemical analysis on incoming materials and chemicals. TI and TI suppliers consider certain information to be proprietary, and thus CAS numbers and other limited information may not be available for release.

In no event shall TI's liability arising out of such information exceed the total purchase price of the TI part(s) at issue in this document sold by TI to Customer on an annual basis.

TAPE AND REEL INFORMATION

REEL DIMENSIONS

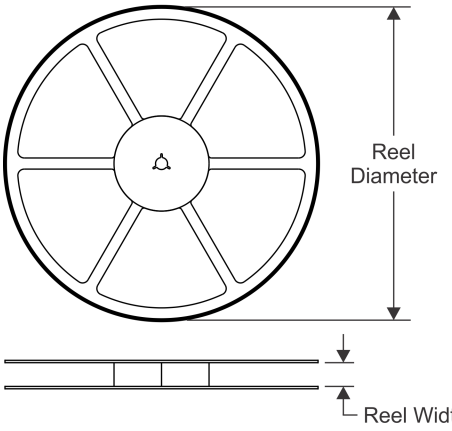

TAPE DIMENSIONS

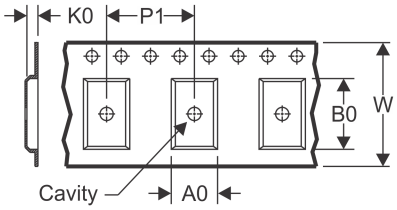

A0	Dimension designed to accommodate the component width
B0	Dimension designed to accommodate the component length
K0	Dimension designed to accommodate the component thickness
W	Overall width of the carrier tape
P1	Pitch between successive cavity centers

QUADRANT ASSIGNMENTS FOR PIN 1 ORIENTATION IN TAPE

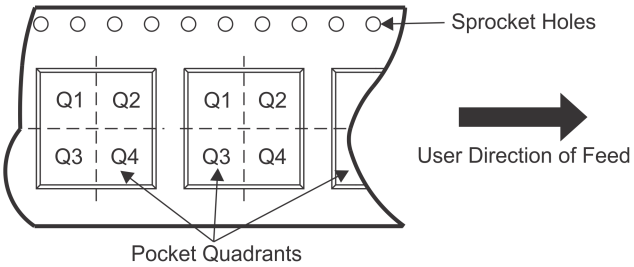

*All dimensions are nominal

Device	Package Type	Package Drawing	Pins	SPQ	Reel Diameter (mm)	Reel Width W1 (mm)	A0 (mm)	B0 (mm)	K0 (mm)	P1 (mm)	W (mm)	Pin1 Quadrant
LP2980IM5-ADJ	SOT-23	DBV	5	1000	178.0	8.4	3.2	3.2	1.4	4.0	8.0	Q3
LP2980IM5-ADJ/NOPB	SOT-23	DBV	5	1000	178.0	8.4	3.2	3.2	1.4	4.0	8.0	Q3
LP2980IM5X-ADJ	SOT-23	DBV	5	3000	178.0	8.4	3.2	3.2	1.4	4.0	8.0	Q3
LP2980IM5X-ADJ/NOPB	SOT-23	DBV	5	3000	178.0	8.4	3.2	3.2	1.4	4.0	8.0	Q3

TAPE AND REEL BOX DIMENSIONS

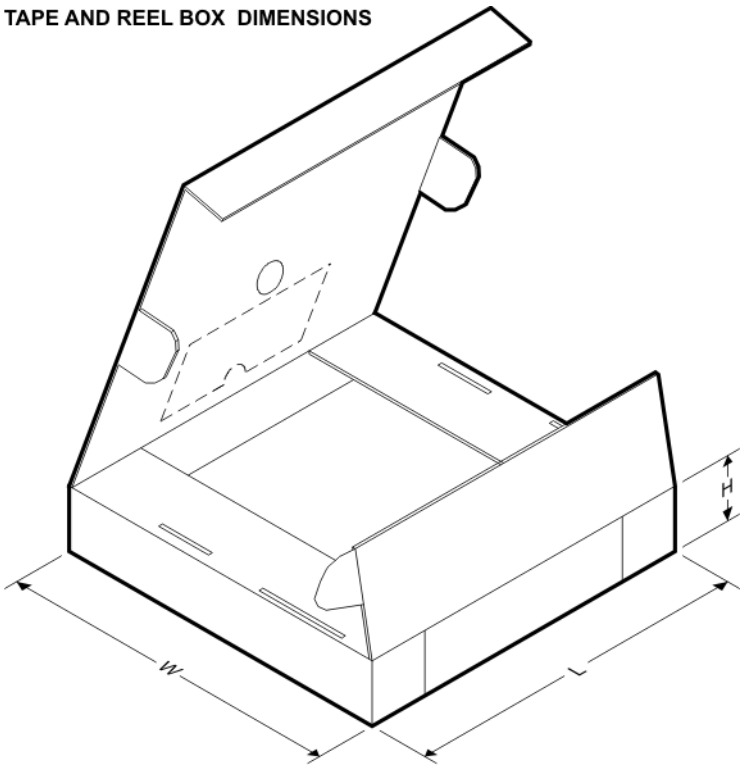

*All dimensions are nominal

Device	Package Type	Package Drawing	Pins	SPQ	Length (mm)	Width (mm)	Height (mm)
LP2980IM5-ADJ	SOT-23	DBV	5	1000	210.0	185.0	35.0
LP2980IM5-ADJ/NOPB	SOT-23	DBV	5	1000	210.0	185.0	35.0
LP2980IM5X-ADJ	SOT-23	DBV	5	3000	210.0	185.0	35.0
LP2980IM5X-ADJ/NOPB	SOT-23	DBV	5	3000	210.0	185.0	35.0

DBV (R–PDSO–G5) PLASTIC SMALL–OUTLINE PACKAGE

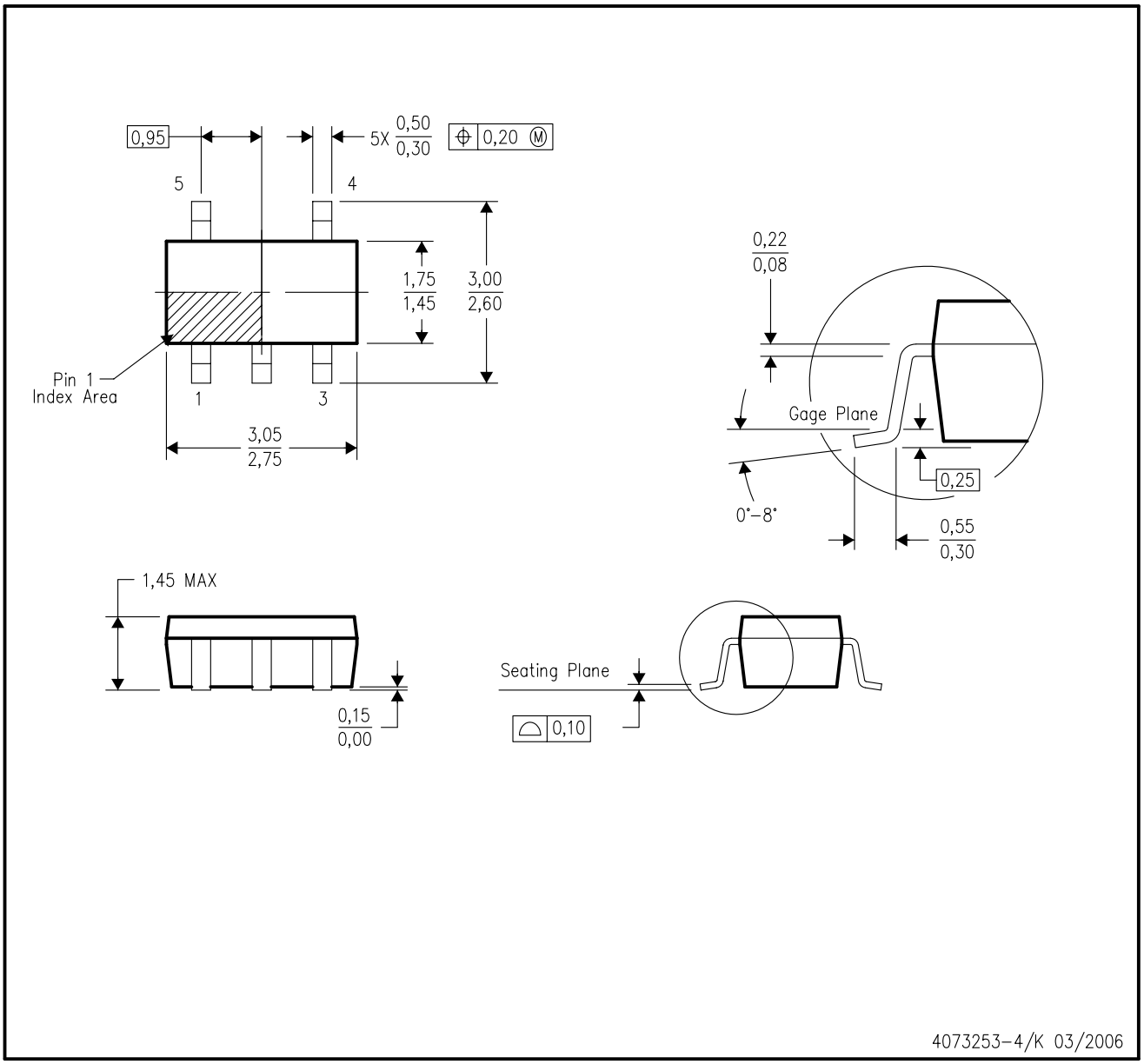

NOTES:
A. All linear dimensions are in millimeters.
B. This drawing is subject to change without notice.
C. Body dimensions do not include mold flash or protrusion. Mold flash and protrusion shall not exceed 0.15 per side.
D. Falls within JEDEC MO–178 Variation AA.

DBV (R-PDSO-G5) PLASTIC SMALL OUTLINE

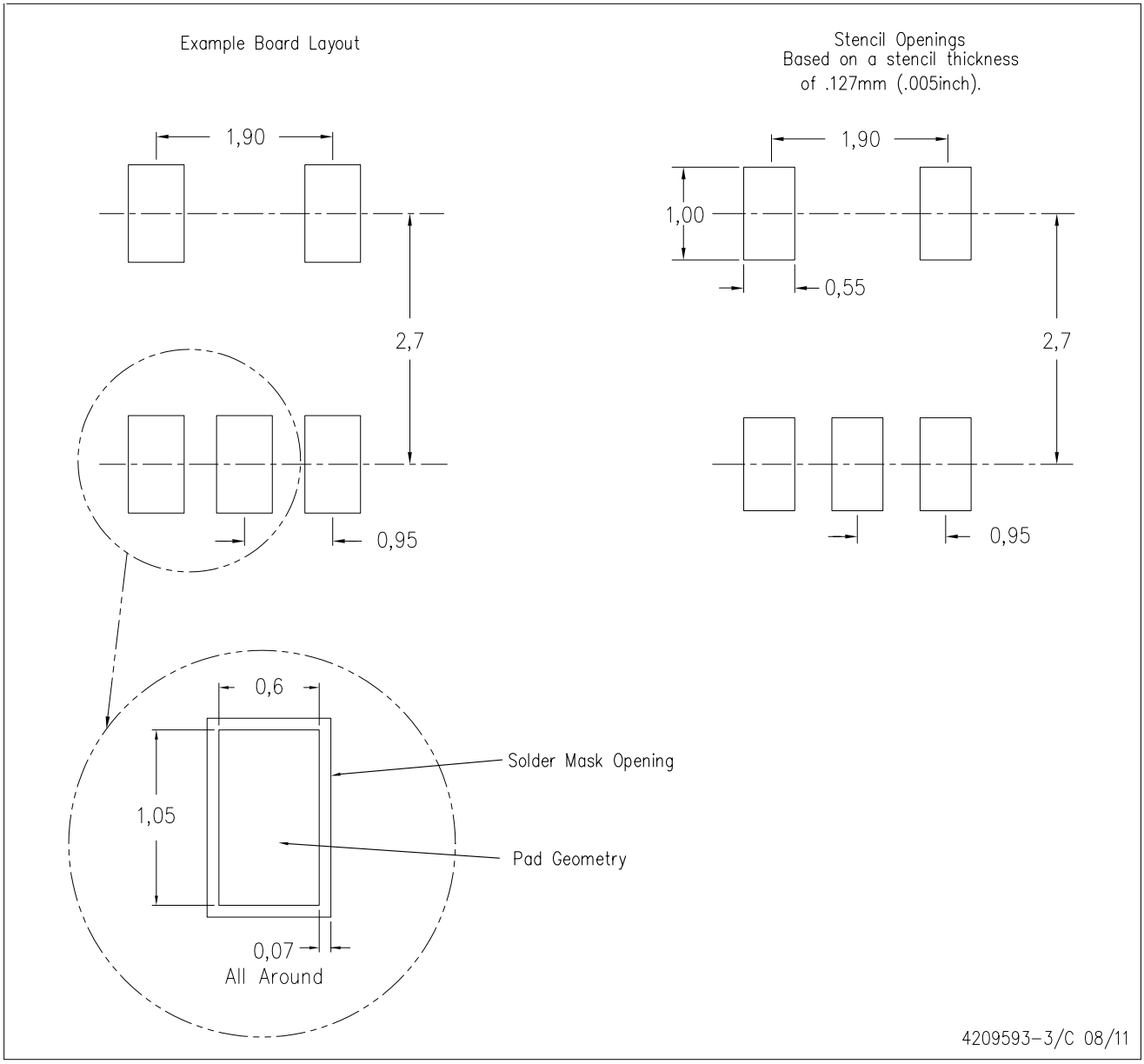

NOTES:
A. All linear dimensions are in millimeters.
B. This drawing is subject to change without notice.
C. Customers should place a note on the circuit board fabrication drawing not to alter the center solder mask defined pad.
D. Publication IPC-7351 is recommended for alternate designs.
E. Laser cutting apertures with trapezoidal walls and also rounding corners will offer better paste release. Customers should contact their board assembly site for stencil design recommendations. Example stencil design based on a 50% volumetric metal load solder paste. Refer to IPC-7525 for other stencil recommendations.

IMPORTANT NOTICE

Texas Instruments Incorporated and its subsidiaries (TI) reserve the right to make corrections, enhancements, improvements and other changes to its semiconductor products and services per JESD46, latest issue, and to discontinue any product or service per JESD48, latest issue. Buyers should obtain the latest relevant information before placing orders and should verify that such information is current and complete. All semiconductor products (also referred to herein as “components”) are sold subject to TI’s terms and conditions of sale supplied at the time of order acknowledgment.

TI warrants performance of its components to the specifications applicable at the time of sale, in accordance with the warranty in TI’s terms and conditions of sale of semiconductor products. Testing and other quality control techniques are used to the extent TI deems necessary to support this warranty. Except where mandated by applicable law, testing of all parameters of each component is not necessarily performed.

TI assumes no liability for applications assistance or the design of Buyers’ products. Buyers are responsible for their products and applications using TI components. To minimize the risks associated with Buyers’ products and applications, Buyers should provide adequate design and operating safeguards.

TI does not warrant or represent that any license, either express or implied, is granted under any patent right, copyright, mask work right, or other intellectual property right relating to any combination, machine, or process in which TI components or services are used. Information published by TI regarding third-party products or services does not constitute a license to use such products or services or a warranty or endorsement thereof. Use of such information may require a license from a third party under the patents or other intellectual property of the third party, or a license from TI under the patents or other intellectual property of TI.

Reproduction of significant portions of TI information in TI data books or data sheets is permissible only if reproduction is without alteration and is accompanied by all associated warranties, conditions, limitations, and notices. TI is not responsible or liable for such altered documentation. Information of third parties may be subject to additional restrictions.

Resale of TI components or services with statements different from or beyond the parameters stated by TI for that component or service voids all express and any implied warranties for the associated TI component or service and is an unfair and deceptive business practice. TI is not responsible or liable for any such statements.

Buyer acknowledges and agrees that it is solely responsible for compliance with all legal, regulatory and safety-related requirements concerning its products, and any use of TI components in its applications, notwithstanding any applications-related information or support that may be provided by TI. Buyer represents and agrees that it has all the necessary expertise to create and implement safeguards which anticipate dangerous consequences of failures, monitor failures and their consequences, lessen the likelihood of failures that might cause harm and take appropriate remedial actions. Buyer will fully indemnify TI and its representatives against any damages arising out of the use of any TI components in safety-critical applications.

In some cases, TI components may be promoted specifically to facilitate safety-related applications. With such components, TI’s goal is to help enable customers to design and create their own end-product solutions that meet applicable functional safety standards and requirements. Nonetheless, such components are subject to these terms.

No TI components are authorized for use in FDA Class III (or similar life-critical medical equipment) unless authorized officers of the parties have executed a special agreement specifically governing such use.

Only those TI components which TI has specifically designated as military grade or “enhanced plastic” are designed and intended for use in military/aerospace applications or environments. Buyer acknowledges and agrees that any military or aerospace use of TI components which have ***not*** been so designated is solely at the Buyer's risk, and that Buyer is solely responsible for compliance with all legal and regulatory requirements in connection with such use.

TI has specifically designated certain components as meeting ISO/TS16949 requirements, mainly for automotive use. In any case of use of non-designated products, TI will not be responsible for any failure to meet ISO/TS16949.

Products		**Applications**	
Audio	www.ti.com/audio	Automotive and Transportation	www.ti.com/automotive
Amplifiers	amplifier.ti.com	Communications and Telecom	www.ti.com/communications
Data Converters	dataconverter.ti.com	Computers and Peripherals	www.ti.com/computers
DLP® Products	www.dlp.com	Consumer Electronics	www.ti.com/consumer-apps
DSP	dsp.ti.com	Energy and Lighting	www.ti.com/energy
Clocks and Timers	www.ti.com/clocks	Industrial	www.ti.com/industrial
Interface	interface.ti.com	Medical	www.ti.com/medical
Logic	logic.ti.com	Security	www.ti.com/security
Power Mgmt	power.ti.com	Space, Avionics and Defense	www.ti.com/space-avionics-defense
Microcontrollers	microcontroller.ti.com	Video and Imaging	www.ti.com/video
RFID	www.ti-rfid.com		
OMAP Applications Processors	www.ti.com/omap	**TI E2E Community**	e2e.ti.com
Wireless Connectivity	www.ti.com/wirelessconnectivity		

Mailing Address: Texas Instruments, Post Office Box 655303, Dallas, Texas 75265
Copyright © 2013, Texas Instruments Incorporated