SLOS069B – FEBRUARY 1971 – REVISED SEPTEMBER 2002

- **Short-Circuit Protection**
- **Wide Common-Mode and Differential Voltage Ranges**
- **No Frequency Compensation Required**
- **Low Power Consumption**
- **No Latch-Up**
- **Designed to Be Interchangeable With Motorola MC1558/MC1458 and Signetics S5558/N5558**

MC1458 . . . D, P, OR PS PACKAGE
MC1558 . . . JG PACKAGE
(TOP VIEW)

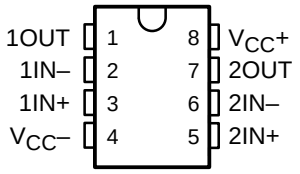

MC1558 . . . FK PACKAGE
(TOP VIEW)

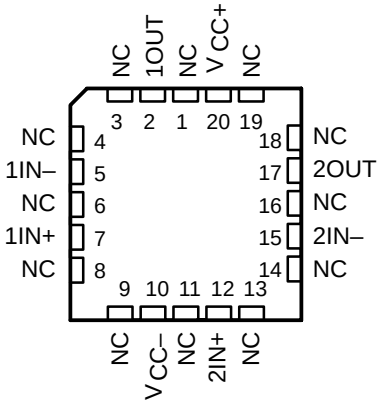

NC – No internal connection

description/ordering information

The MC1458 and MC1558 are dual general-purpose operational amplifiers, with each half electrically similar to the µA741, except that offset null capability is not provided.

The high-common-mode input voltage range and the absence of latch-up make these amplifiers ideal for voltage-follower applications. The devices are short-circuit protected and the internal frequency compensation ensures stability without external components.

ORDERING INFORMATION

T_A	V_{IO}max AT 25°C	PACKAGE†		ORDERABLE PART NUMBER	TOP-SIDE MARKING
0°C to 70°C	6 mV	PDIP (P)	Tube	MC1458P	MC1458P
		SOIC (D)	Tube	MC1458D	MC1458
			Tape and reel	MC1458DR	
		SOP (PS)	Tape and reel	MC1458PSR	M1458
–55°C to 125°C	5 mV	CDIP (JG)	Tube	MC1558JG	MC1558JG
		CDIP (JGB)	Tube	MC1558JGB	MC1558JGB
		LCCC (FK)	Tube	MC1558FK	MC1558FK

† Package drawings, standard packing quantities, thermal data, symbolization, and PCB design guidelines are available at www.ti.com/sc/package.

PRODUCTION DATA information is current as of publication date. Products conform to specifications per the terms of Texas Instruments standard warranty. Production processing does not necessarily include testing of all parameters.

Copyright © 2002, Texas Instruments Incorporated

On products compliant to MIL-PRF-38535, all parameters are tested unless otherwise noted. On all other products, production processing does not necessarily include testing of all parameters.

symbol (each amplifier)

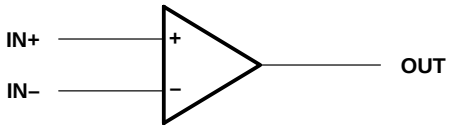

schematic (each amplifier)

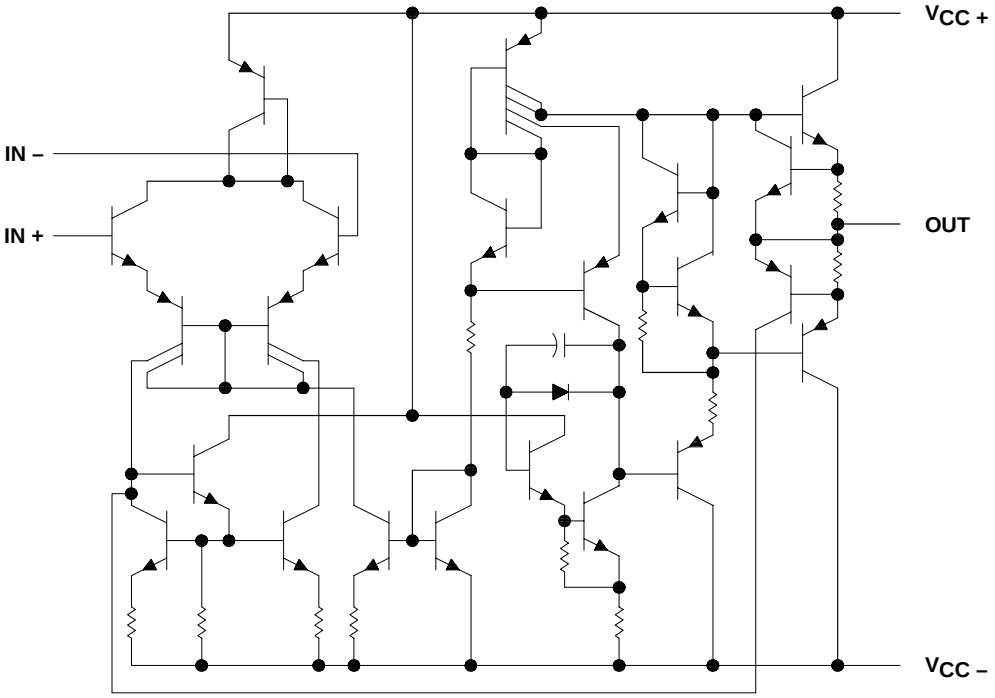

absolute maximum ratings over operating free-air temperature range (unless otherwise noted)†

Supply voltage, V_{CC+} (see Note 1):	MC1458	18 V
	MC1558	22 V
Supply voltage, V_{CC-} (see Note 1):	MC1458	–18 V
	MC1558	–22 V
Differential input voltage, V_{ID} (see Note 2)		±30 V
Input voltage, V_I (either input, see Notes 1 and 3)		±15 V
Duration of output short circuit (see Note 4)		Unlimited
Operating virtual junction temperature, T_J		150°C
Package thermal impedance, θ_{JA} (see Notes 5 and 6):	D package	97°C/W
	P package	85°C/W
	PS package	95°C/W
Package thermal impedance, θ_{JC} (see Notes 7 and 8):	FK package	5.61°C/W
	JG package	14.5°C/W
Case temperature for 60 seconds: FK package		260°C
Lead temperature 1,6 mm (1/16 inch) from case for 10 seconds: JG package		300°C
Lead temperature 1,6 mm (1/16 inch) from case for 60 seconds: D, P, or PS package		260°C
Storage temperature range, T_{stg}		–65°C to 150°C

† Stresses beyond those listed under “absolute maximum ratings” may cause permanent damage to the device. These are stress ratings only, and functional operation of the device at these or any other conditions beyond those indicated under “recommended operating conditions” is not implied. Exposure to absolute-maximum-rated conditions for extended periods may affect device reliability.

NOTES:
1. All voltage values, unless otherwise noted, are with respect to the midpoint between V_{CC+} and V_{CC-}.
2. Differential voltages are at IN+ with respect to IN–.
3. The magnitude of the input voltage must never exceed the magnitude of the supply voltage or 15 V, whichever is less.
4. The output can be shorted to ground or either power supply. For the MC1558 only, the unlimited duration of the short circuit applies at (or below) 125°C case temperature or 70°C free-air temperature.
5. Maximum power dissipation is a function of $T_J(max)$, θ_{JA}, and T_A. The maximum allowable power dissipation at any allowable ambient temperature is $P_D = (T_J(max) - T_A)/\theta_{JA}$. Operating at the absolute maximum T_J of 150°C can affect reliability.
6. The package thermal impedance is calculated in accordance with JESD 51-7.
7. Maximum power dissipation is a function of $T_J(max)$, θ_{JC}, and T_C. The maximum allowable power dissipation at any allowable case temperature is $P_D = (T_J(max) - T_C)/\theta_{JC}$. Operating at the absolute maximum T_J of 150°C can affect reliability.
8. The package thermal impedance is calculated in accordance with MIL-STD-883.

recommended operating conditions

			MIN	MAX	UNIT
$V_{CC\pm}$	Supply voltage		±5	±15	V
T_A	Operating free-air temperature range	MC1458	0	70	°C
		MC1558	–55	125	

electrical characteristics at specified free-air temperature, $V_{CC\pm} = \pm 15$ V

PARAMETER		TEST CONDITIONS†		MC1458			MC1558			UNIT
				MIN	TYP	MAX	MIN	TYP	MAX	
V_{IO}	Input offset voltage	$V_O = 0$	25°C		1	6		1	5	mV
			Full range			7.5			6	
I_{IO}	Input offset current	$V_O = 0$	25°C		20	200		20	200	nA
			Full range			300			500	
I_{IB}	Input bias current	$V_O = 0$	25°C		80	500		80	500	nA
			Full range			800			1500	
V_{ICR}	Common-mode input voltage range		25°C	±12	±13		±12	±13		V
			Full range	±12			±12			
V_{OM}	Maximum peak output voltage swing	$R_L = 10\ k\Omega$	25°C	±12	±14		±12	±14		V
		$R_L \geq 10\ k\Omega$	Full range	±12			±12			
		$R_L = 2\ k\Omega$	25°C	±10	±13		±10	±13		
		$R_L \geq 2\ k\Omega$	Full range	±10			±10			
A_{VD}	Large-signal differential voltage amplification	$R_L \geq 2\ k\Omega$, $V_O = \pm 10$ V	25°C	20	200		50	200		V/mV
			Full range	15			25			
B_{OM}	Maximum-output-swing bandwidth (closed loop)	$R_L = 2\ k\Omega$, $V_O \geq \pm 10$ V, $A_{VD} = 1$, THD ≥ 5%	25°C		14			14		kHz
B_1	Unity-gain bandwidth		25°C		1			1		MHz
ϕm	Phase margin	$A_{VD} = 1$	25°C		65			65		deg
	Gain margin		25°C		11			11		dB
r_i	Input resistance		25°C	0.3	2		0.3*	2		MΩ
r_o	Output resistance	$V_O = 0$, See Note 9	25°C		75			75		Ω
C_i	Input capacitance		25°C		1.4			1.4		pF
z_{ic}	Common-mode input impedance	f = 20 Hz	25°C		200			200		MΩ
CMRR	Common-mode rejection ratio	$V_{IC} = V_{ICR}$ min, $V_O = 0$	25°C	70	90		70	90		dB
			Full range	70			70			
k_{SVS}	Supply-voltage sensitivity ($\Delta V_{IO}/\Delta V_{CC}$)	$V_{CC} = \pm 9$ V to ±15 V, $V_O = 0$	25°C		30	150		30	150	µV/V
			Full range			150			150	
V_n	Equivalent input noise voltage (closed loop)	$A_{VD} = 100$, $R_S = 0$, f = 1 kHz, BW = 1 Hz	25°C		45			45		nV/√Hz
I_{OS}	Short-circuit output current		25°C		±25	±40		±25	±40	mA
I_{CC}	Supply current (both amplifiers)	$V_O = 0$, No load	25°C		3.4	5.6		3.4	5	mA
			Full range			6.6			6.6	
P_D	Total power dissipation (both amplifiers)	$V_O = 0$, No load	25°C		100	170		100	150	mW
			Full range			200			200	
V_{O1}/V_{O2}	Crosstalk attenuation		25°C		120			120		dB

*On products compliant to MIL-PRF-38535, this parameter is not production tested.

† All characteristics are specified under open-loop operating conditions with zero common-mode input voltage, unless otherwise specified. Full range for MC1458 is 0°C to 70°C and for MC1558 is –55°C to 125°C.

NOTE 9: This typical value applies only at frequencies above a few hundred hertz because of the effect of drift and thermal feedback.

operating characteristics, $V_{CC\pm}$ = ±15 V, C_L = 100 pF, T_A = 25°C (see Figure 1)

PARAMETER		TEST CONDITIONS		MC1458			MC1558			UNIT
				MIN	TYP	MAX	MIN	TYP	MAX	
t_r	Rise time	V_I = 20 mV,	R_L = 2 kΩ,		0.3			0.3		µs
	Overshoot factor	V_I = 20 mV,	R_L = 2 kΩ		5			5		%
SR	Slew rate at unity gain	V_I = 10 V,	R_L = 2 kΩ		0.5			0.5		V/µs

PARAMETER MEASUREMENT INFORMATION

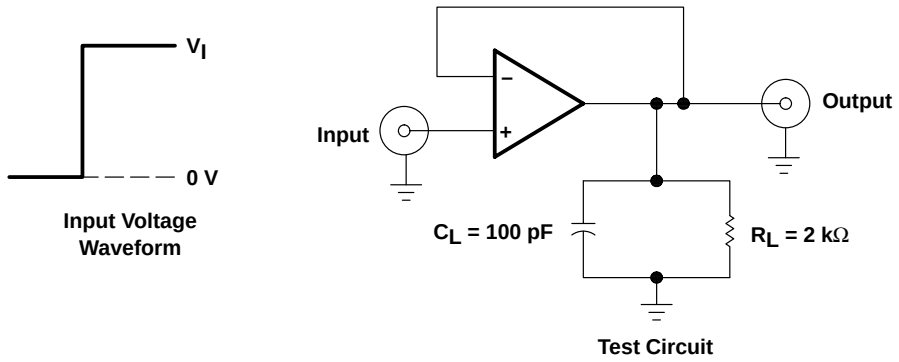

Figure 1. Rise-Time, Overshoot, and Slew-Rate Waveform and Test Circuit

IMPORTANT NOTICE

Texas Instruments Incorporated and its subsidiaries (TI) reserve the right to make corrections, modifications, enhancements, improvements, and other changes to its products and services at any time and to discontinue any product or service without notice. Customers should obtain the latest relevant information before placing orders and should verify that such information is current and complete. All products are sold subject to TI's terms and conditions of sale supplied at the time of order acknowledgment.

TI warrants performance of its hardware products to the specifications applicable at the time of sale in accordance with TI's standard warranty. Testing and other quality control techniques are used to the extent TI deems necessary to support this warranty. Except where mandated by government requirements, testing of all parameters of each product is not necessarily performed.

TI assumes no liability for applications assistance or customer product design. Customers are responsible for their products and applications using TI components. To minimize the risks associated with customer products and applications, customers should provide adequate design and operating safeguards.

TI does not warrant or represent that any license, either express or implied, is granted under any TI patent right, copyright, mask work right, or other TI intellectual property right relating to any combination, machine, or process in which TI products or services are used. Information published by TI regarding third–party products or services does not constitute a license from TI to use such products or services or a warranty or endorsement thereof. Use of such information may require a license from a third party under the patents or other intellectual property of the third party, or a license from TI under the patents or other intellectual property of TI.

Reproduction of information in TI data books or data sheets is permissible only if reproduction is without alteration and is accompanied by all associated warranties, conditions, limitations, and notices. Reproduction of this information with alteration is an unfair and deceptive business practice. TI is not responsible or liable for such altered documentation.

Resale of TI products or services with statements different from or beyond the parameters stated by TI for that product or service voids all express and any implied warranties for the associated TI product or service and is an unfair and deceptive business practice. TI is not responsible or liable for any such statements.

Mailing Address:

Texas Instruments
Post Office Box 655303
Dallas, Texas 75265

Copyright © 2002, Texas Instruments Incorporated