LM317, NCV317

1.5 A Adjustable Output, Positive Voltage Regulator

The LM317 is an adjustable 3−terminal positive voltage regulator capable of supplying in excess of 1.5 A over an output voltage range of 1.2 V to 37 V. This voltage regulator is exceptionally easy to use and requires only two external resistors to set the output voltage. Further, it employs internal current limiting, thermal shutdown and safe area compensation, making it essentially blow−out proof.

The LM317 serves a wide variety of applications including local, on card regulation. This device can also be used to make a programmable output regulator, or by connecting a fixed resistor between the adjustment and output, the LM317 can be used as a precision current regulator.

Features

- Output Current in Excess of 1.5 A
- Output Adjustable between 1.2 V and 37 V
- Internal Thermal Overload Protection
- Internal Short Circuit Current Limiting Constant with Temperature
- Output Transistor Safe−Area Compensation
- Floating Operation for High Voltage Applications
- Available in Surface Mount D^2PAK−3, and Standard 3−Lead Transistor Package
- Eliminates Stocking many Fixed Voltages
- Pb−Free Packages are Available

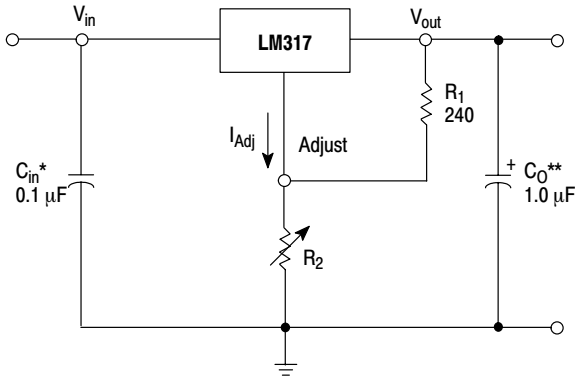

* C_{in} is required if regulator is located an appreciable distance from power supply filter.
** C_O is not needed for stability, however, it does improve transient response.

$$V_{out} = 1.25\,V\left(1 + \frac{R_2}{R_1}\right) + I_{Adj}R_2$$

Since I_{Adj} is controlled to less than 100 μA, the error associated with this term is negligible in most applications.

Figure 1. Standard Application

ON Semiconductor®

http://onsemi.com

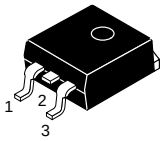

D^2PAK−3
D2T SUFFIX
CASE 936

Heatsink surface (shown as terminal 4 in case outline drawing) is connected to Pin 2.

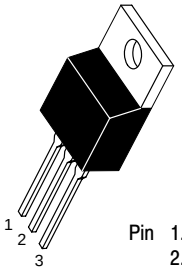

TO−220
T SUFFIX
CASE 221A

Pin 1. Adjust
2. V_{out}
3. V_{in}

Heatsink surface connected to Pin 2.

ORDERING INFORMATION

See detailed ordering and shipping information in the package dimensions section on page 10 of this data sheet.

DEVICE MARKING INFORMATION

See general marking information in the device marking section on page 10 of this data sheet.

© Semiconductor Components Industries, LLC, 2004

April, 2004 − Rev. 7
Publication Order Number:
LM317/D

MAXIMUM RATINGS

Rating	Symbol	Value	Unit
Input−Output Voltage Differential	V_I-V_O	40	Vdc
Power Dissipation			
Case 221A			
T_A = +25°C	P_D	Internally Limited	W
Thermal Resistance, Junction−to−Ambient	θ_{JA}	65	°C/W
Thermal Resistance, Junction−to−Case	θ_{JC}	5.0	°C/W
Case 936 (D^2PAK−3)			
T_A = +25°C	P_D	Internally Limited	W
Thermal Resistance, Junction−to−Ambient	θ_{JA}	70	°C/W
Thermal Resistance, Junction−to−Case	θ_{JC}	5.0	°C/W
Operating Junction Temperature Range	T_J	−55 to +150	°C
Storage Temperature Range	T_{stg}	−65 to +150	°C

ELECTRICAL CHARACTERISTICS (V_I-V_O = 5.0 V; I_O = 0.5 A for D2T and T packages; $T_J = T_{low}$ to T_{high} (Note 1); I_{max} and P_{max} (Note 2); unless otherwise noted.)

Characteristics	Figure	Symbol	Min	Typ	Max	Unit
Line Regulation (Note 3), T_A = +25°C, 3.0 V ≤ V_I-V_O ≤ 40 V	1	Reg_{line}	−	0.01	0.04	%/V
Load Regulation (Note 3), T_A = +25°C, 10 mA ≤ I_O ≤ I_{max}	2	Reg_{load}				
V_O ≤ 5.0 V			−	5.0	25	mV
V_O ≥ 5.0 V			−	0.1	0.5	% V_O
Thermal Regulation, T_A = +25°C (Note 4), 20 ms Pulse		Reg_{therm}	−	0.03	0.07	% V_O/W
Adjustment Pin Current	3	I_{Adj}	−	50	100	μA
Adjustment Pin Current Change, 2.5 V ≤ V_I-V_O ≤ 40 V, 10 mA ≤ I_L ≤ I_{max}, P_D ≤ P_{max}	1, 2	ΔI_{Adj}	−	0.2	5.0	μA
Reference Voltage, 3.0 V ≤ V_I-V_O ≤ 40 V, 10 mA ≤ I_O ≤ I_{max}, P_D ≤ P_{max}	3	V_{ref}	1.2	1.25	1.3	V
Line Regulation (Note 3), 3.0 V ≤ V_I-V_O ≤ 40 V	1	Reg_{line}	−	0.02	0.07	% V
Load Regulation (Note 3), 10 mA ≤ I_O ≤ I_{max}	2	Reg_{load}				
V_O ≤ 5.0 V			−	20	70	mV
V_O ≥ 5.0 V			−	0.3	1.5	% V_O
Temperature Stability ($T_{low} \le T_J \le T_{high}$)	3	T_S	−	0.7	−	% V_O
Minimum Load Current to Maintain Regulation (V_I-V_O = 40 V)	3	I_{Lmin}	−	3.5	10	mA
Maximum Output Current	3	I_{max}				A
V_I-V_O ≤ 15 V, P_D ≤ P_{max}, T Package			1.5	2.2	−	
V_I-V_O = 40 V, P_D ≤ P_{max}, T_A = +25°C, T Package			0.15	0.4	−	
RMS Noise, % of V_O, T_A = +25°C, 10 Hz ≤ f ≤ 10 kHz		N	−	0.003	−	% V_O
Ripple Rejection, V_O = 10 V, f = 120 Hz (Note 5)	4	RR				dB
Without C_{Adj}			−	65	−	
C_{Adj} = 10 μF			66	80	−	
Long−Term Stability, $T_J = T_{high}$ (Note 6), T_A = +25°C for Endpoint Measurements	3	S	−	0.3	1.0	%/1.0 k Hrs.
Thermal Resistance Junction to Case, T Package		$R_{\theta JC}$	−	5.0	−	°C/W

1. T_{low} to T_{high} = 0° to +125°C, for LM317T, D2T. T_{low} to T_{high} = −40° to +125°C, for LM317BT, BD2T, T_{low} to T_{high} = −55° to +150°C, for NCV317BT, BD2T.
2. I_{max} = 1.5 A, P_{max} = 20 W
3. Load and line regulation are specified at constant junction temperature. Changes in V_O due to heating effects must be taken into account separately. Pulse testing with low duty cycle is used.
4. Power dissipation within an IC voltage regulator produces a temperature gradient on the die, affecting individual IC components on the die. These effects can be minimized by proper integrated circuit design and layout techniques. Thermal Regulation is the effect of these temperature gradients on the output voltage and is expressed in percentage of output change per watt of power change in a specified time.
5. C_{Adj}, when used, is connected between the adjustment pin and ground.
6. Since Long−Term Stability cannot be measured on each device before shipment, this specification is an engineering estimate of average stability from lot to lot.

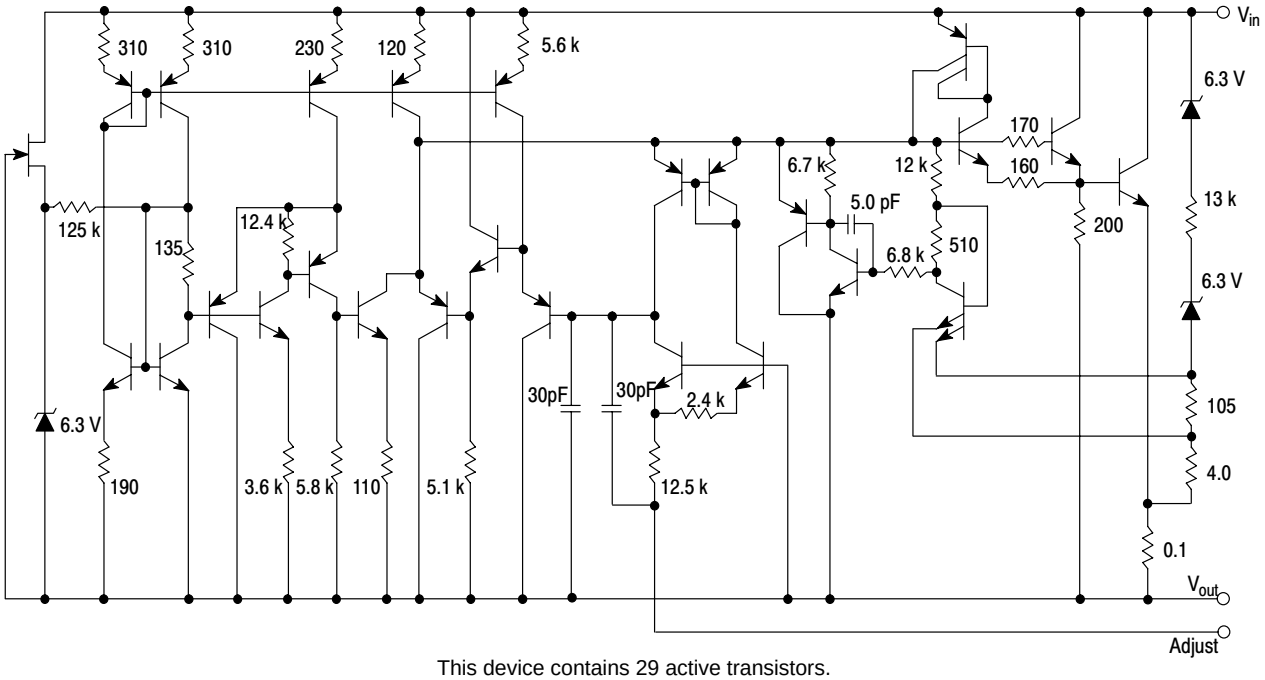

This device contains 29 active transistors.

Figure 2. Representative Schematic Diagram

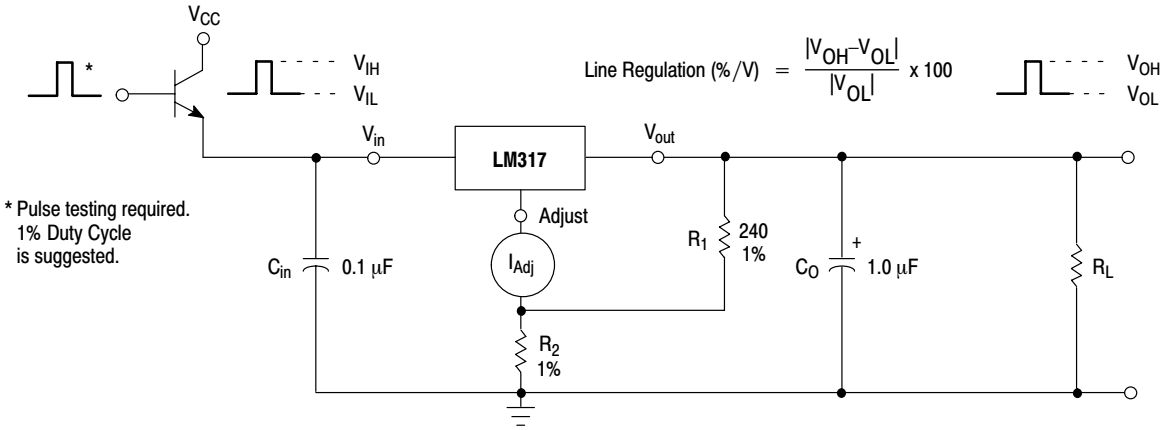

Figure 3. Line Regulation and ΔI_{Adj}/Line Test Circuit

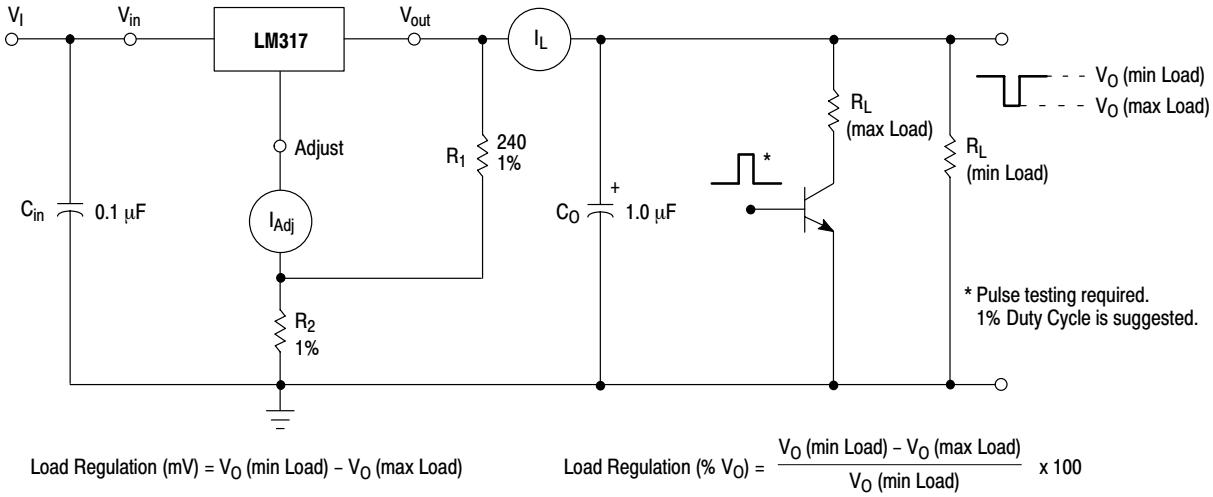

Figure 4. Load Regulation and ΔI_{Adj}/Load Test Circuit

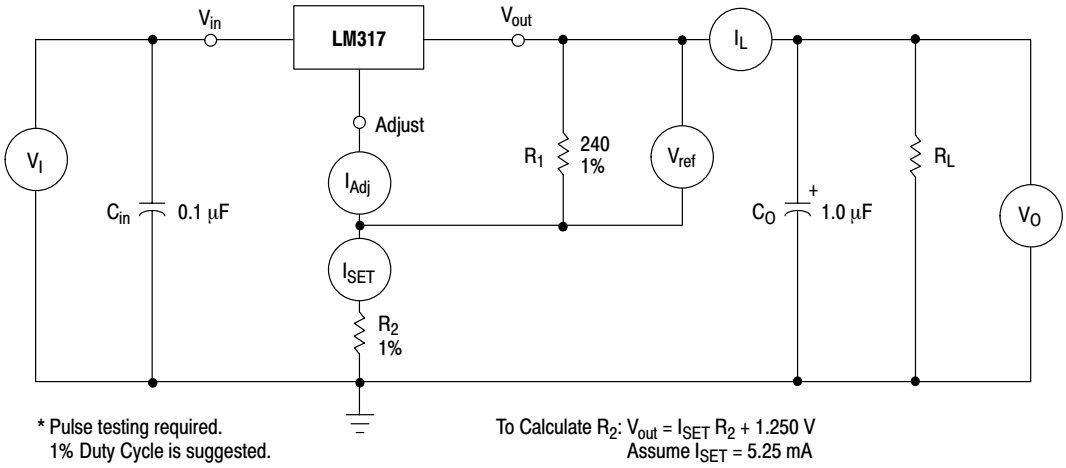

Figure 5. Standard Test Circuit

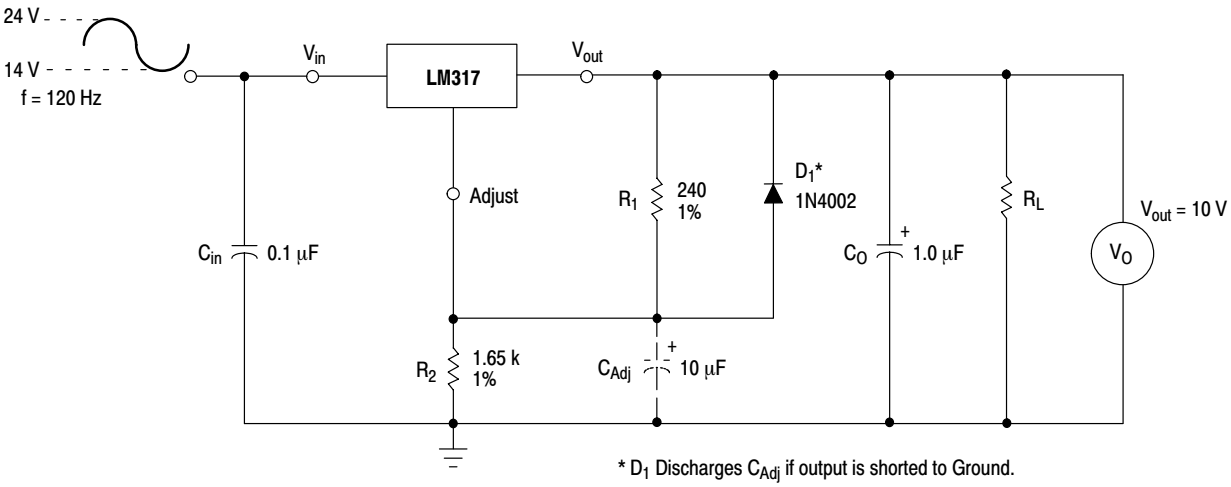

Figure 6. Ripple Rejection Test Circuit

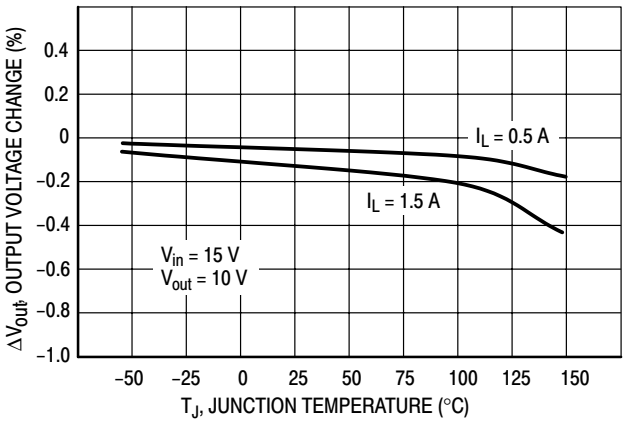

Figure 7. Load Regulation

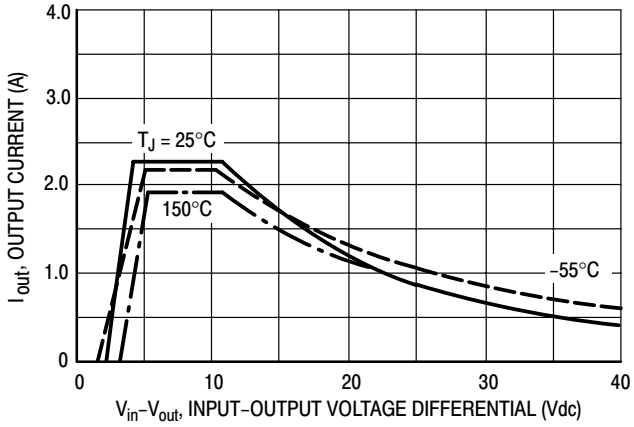

Figure 8. Current Limit

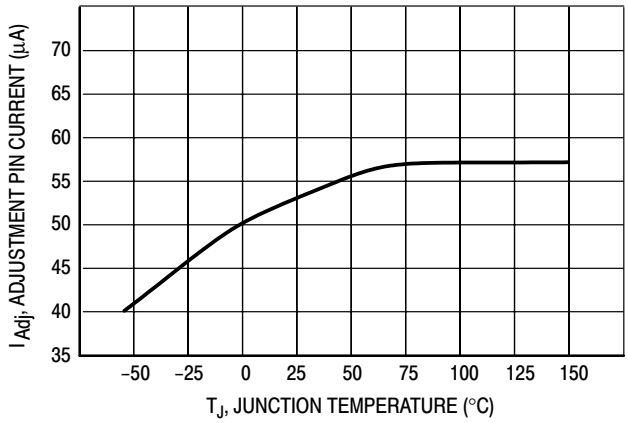

Figure 9. Adjustment Pin Current

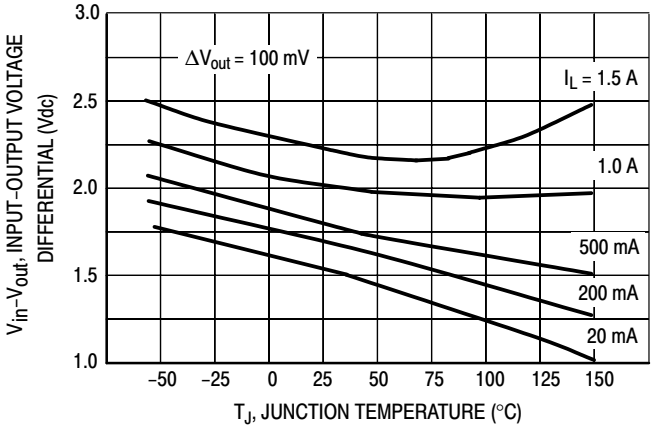

Figure 10. Dropout Voltage

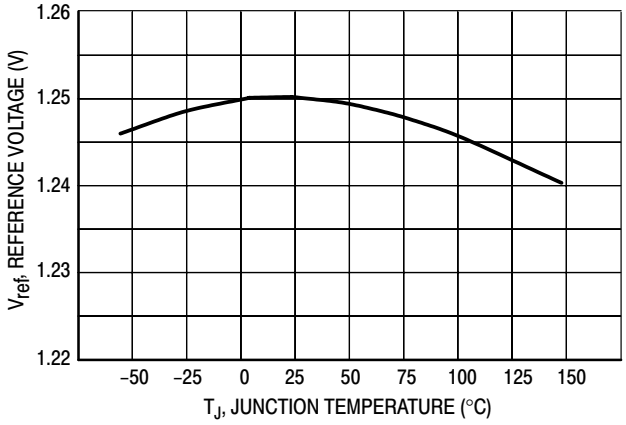

Figure 11. Temperature Stability

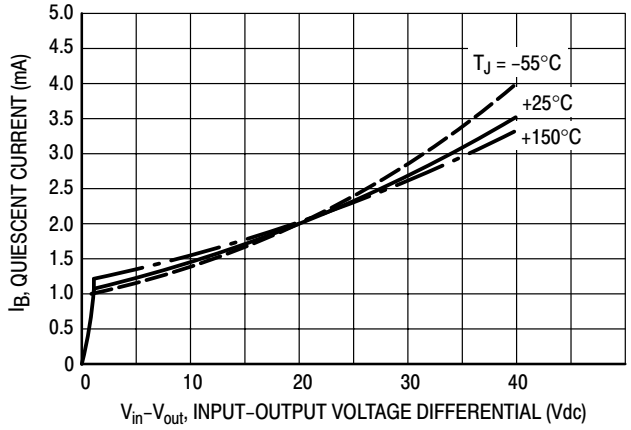

Figure 12. Minimum Operating Current

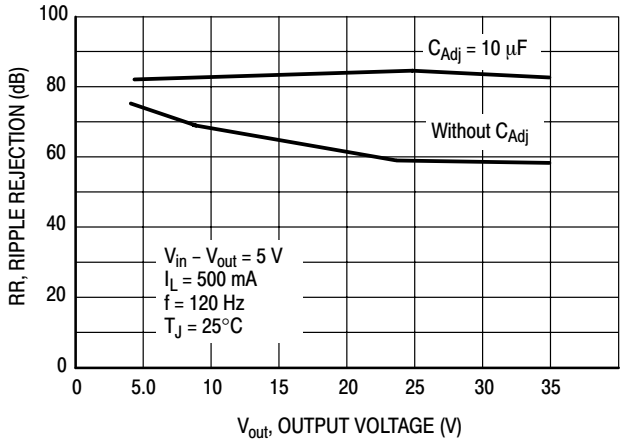

Figure 13. Ripple Rejection versus Output Voltage

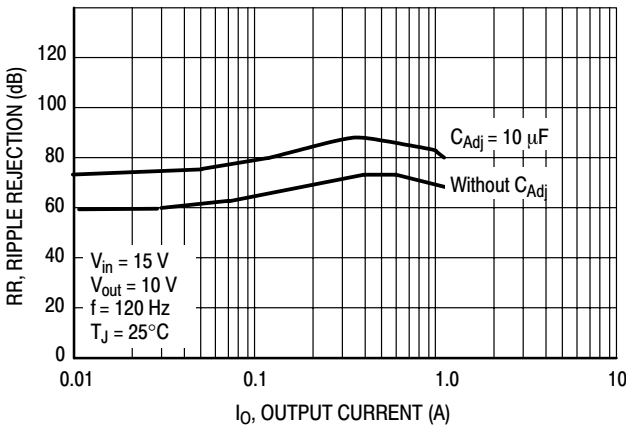

Figure 14. Ripple Rejection versus Output Current

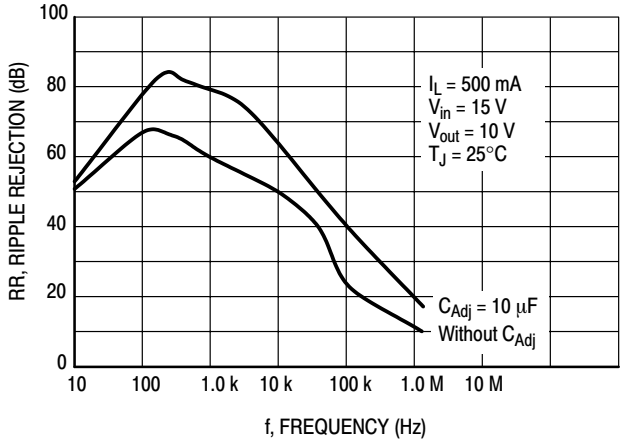

Figure 15. Ripple Rejection versus Frequency

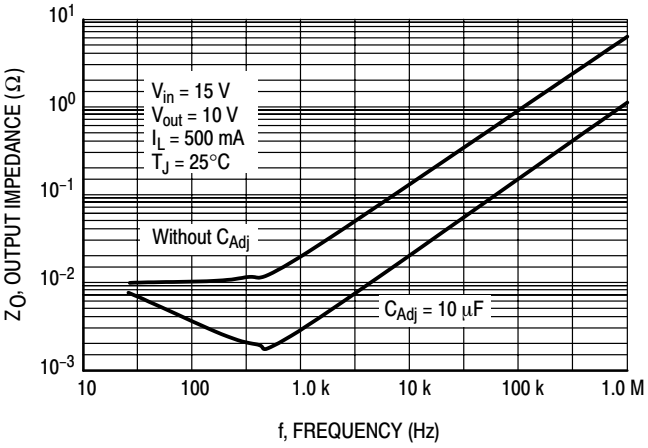

Figure 16. Output Impedance

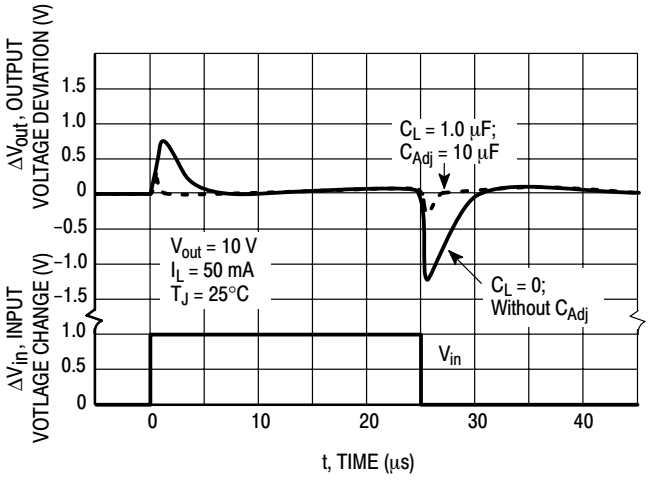

Figure 17. Line Transient Response

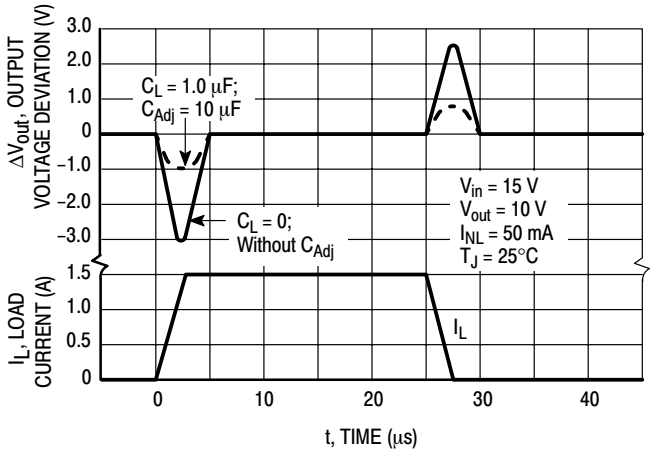

Figure 18. Load Transient Response

APPLICATIONS INFORMATION

Basic Circuit Operation

The LM317 is a 3−terminal floating regulator. In operation, the LM317 develops and maintains a nominal 1.25 V reference (V_{ref}) between its output and adjustment terminals. This reference voltage is converted to a programming current (I_{PROG}) by R_1 (see Figure 17), and this constant current flows through R_2 to ground.

The regulated output voltage is given by:

$$V_{out} = V_{ref}\left(1 + \frac{R_2}{R_1}\right) + I_{Adj}R_2$$

Since the current from the adjustment terminal (I_{Adj}) represents an error term in the equation, the LM317 was designed to control I_{Adj} to less than 100 μA and keep it constant. To do this, all quiescent operating current is returned to the output terminal. This imposes the requirement for a minimum load current. If the load current is less than this minimum, the output voltage will rise.

Since the LM317 is a floating regulator, it is only the voltage differential across the circuit which is important to performance, and operation at high voltages with respect to ground is possible.

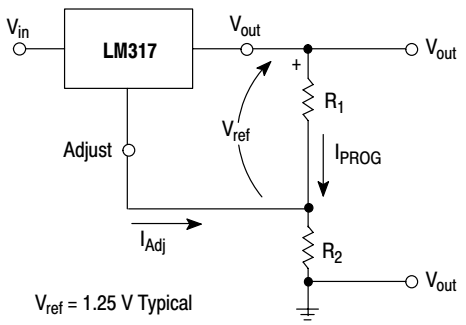

Figure 19. Basic Circuit Configuration

Load Regulation

The LM317 is capable of providing extremely good load regulation, but a few precautions are needed to obtain maximum performance. For best performance, the programming resistor (R_1) should be connected as close to the regulator as possible to minimize line drops which effectively appear in series with the reference, thereby degrading regulation. The ground end of R_2 can be returned near the load ground to provide remote ground sensing and improve load regulation.

External Capacitors

A 0.1 μF disc or 1.0 μF tantalum input bypass capacitor (C_{in}) is recommended to reduce the sensitivity to input line impedance.

The adjustment terminal may be bypassed to ground to improve ripple rejection. This capacitor (C_{Adj}) prevents ripple from being amplified as the output voltage is increased. A 10 μF capacitor should improve ripple rejection about 15 dB at 120 Hz in a 10 V application.

Although the LM317 is stable with no output capacitance, like any feedback circuit, certain values of external capacitance can cause excessive ringing. An output capacitance (C_O) in the form of a 1.0 μF tantalum or 25 μF aluminum electrolytic capacitor on the output swamps this effect and insures stability.

Protection Diodes

When external capacitors are used with any IC regulator it is sometimes necessary to add protection diodes to prevent the capacitors from discharging through low current points into the regulator.

Figure 18 shows the LM317 with the recommended protection diodes for output voltages in excess of 25 V or high capacitance values (C_O > 25 μF, C_{Adj} > 10 μF). Diode D_1 prevents C_O from discharging thru the IC during an input short circuit. Diode D_2 protects against capacitor C_{Adj} discharging through the IC during an output short circuit. The combination of diodes D_1 and D_2 prevents C_{Adj} from discharging through the IC during an input short circuit.

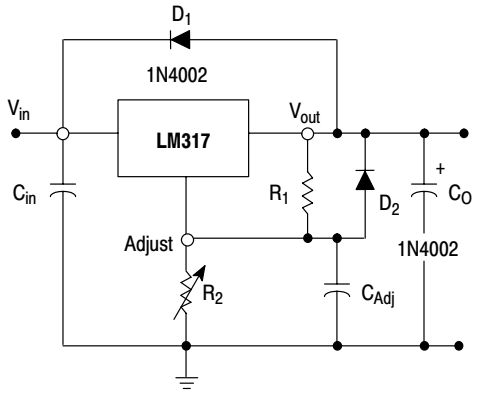

Figure 20. Voltage Regulator with Protection Diodes

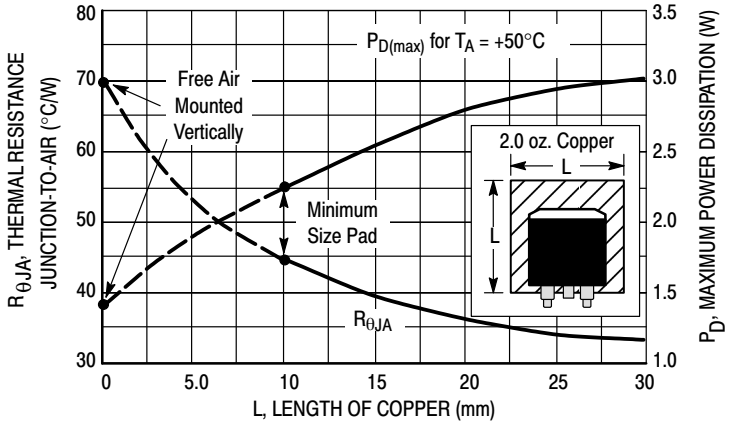

Figure 21. D²PAK Thermal Resistance and Maximum Power Dissipation versus P.C.B. Copper Length

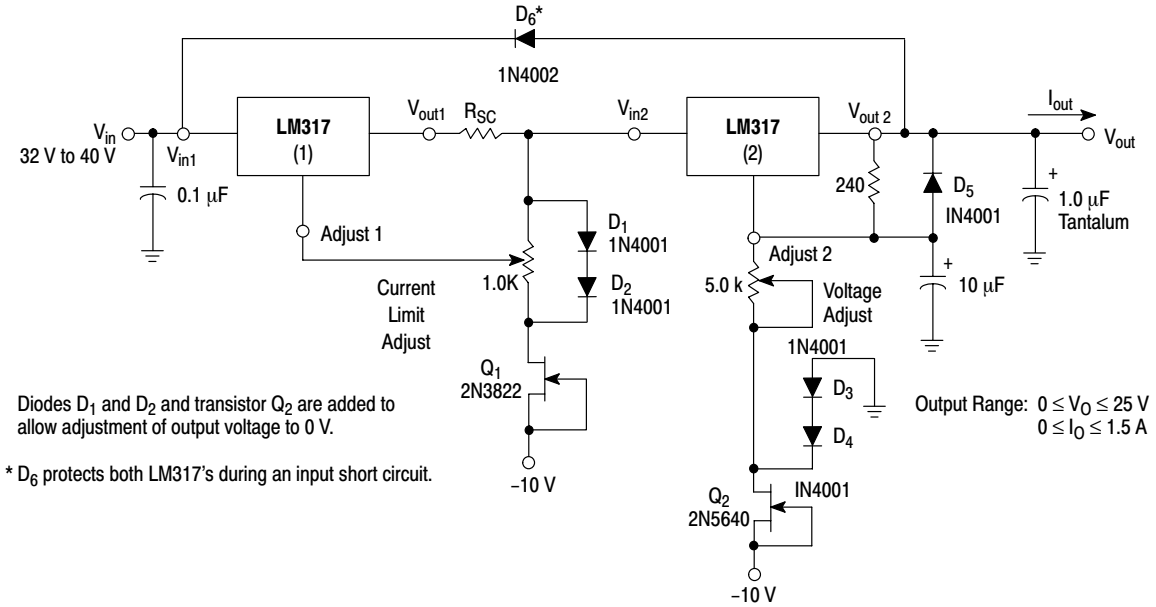

Figure 22. "Laboratory" Power Supply with Adjustable Current Limit and Output Voltage

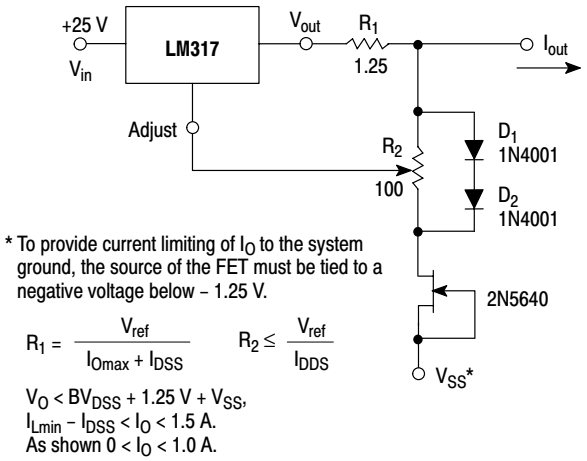

Figure 23. Adjustable Current Limiter

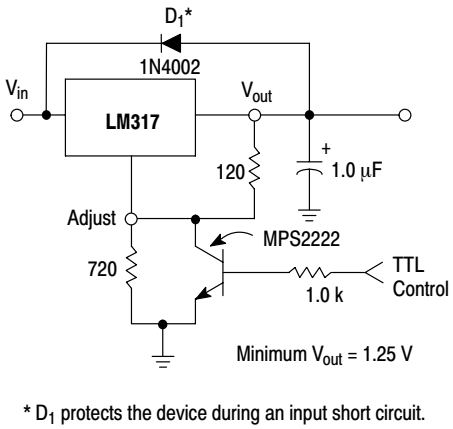

Figure 24. 5.0 V Electronic Shutdown Regulator

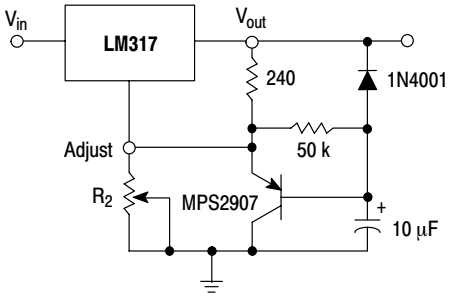

Figure 25. Slow Turn−On Regulator

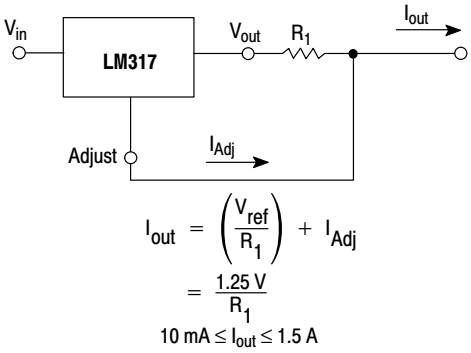

Figure 26. Current Regulator

MARKING DIAGRAMS

D²PAK−3
D2T SUFFIX
CASE 936

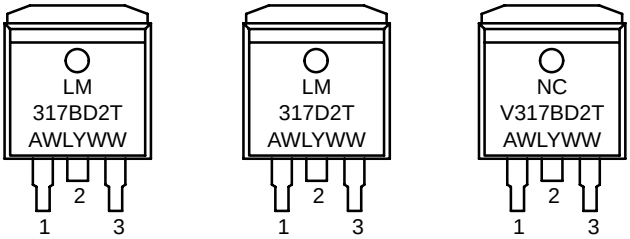

TO−220
T SUFFIX
CASE 221A

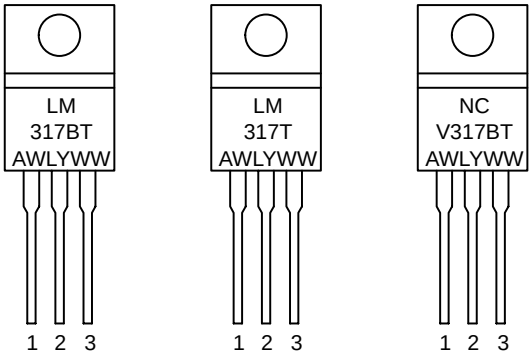

A = Assembly Location
WL = Wafer Lot
Y = Year
WW = Work Week

ORDERING INFORMATION

Device	Operating Temperature Range	Package	Shipping†
LM317BD2T	T_J = −40° to +125°C	D²PAK−3	50 Units / Rail
LM317BD2TG		D²PAK−3 (Pb−Free)	
LM317BD2TR4		D²PAK−3	800 Tape & Reel
LM317BD2TR4G		D²PAK−3 (Pb−Free)	
LM317BT		TO−220	50 Units / Rail
LM317BTG		TO−220 (Pb−Free)	
LM317D2T	T_J = 0° to +125°C	D²PAK−3	50 Units / Rail
LM317D2TR4		D²PAK−3	800 Tape & Reel
LM317T		TO−220	50 Units / Rail
LM317TG		TO−220 (Pb−Free)	
NCV317BD2T*	T_J = −55° to +150°C	D²PAK−3	50 Units / Rail
NCV317BD2TR4*		D²PAK−3	800 Tape & Reel
NCV317BT*		TO−220	50 Units / Rail

†For information on tape and reel specifications, including part orientation and tape sizes, please refer to our Tape and Reel Packaging Specifications Brochure, BRD8011/D.
*Devices are qualified for automotive use.

PACKAGE DIMENSIONS

D²PAK−3
D2T SUFFIX
PLASTIC PACKAGE
CASE 936−03
ISSUE B

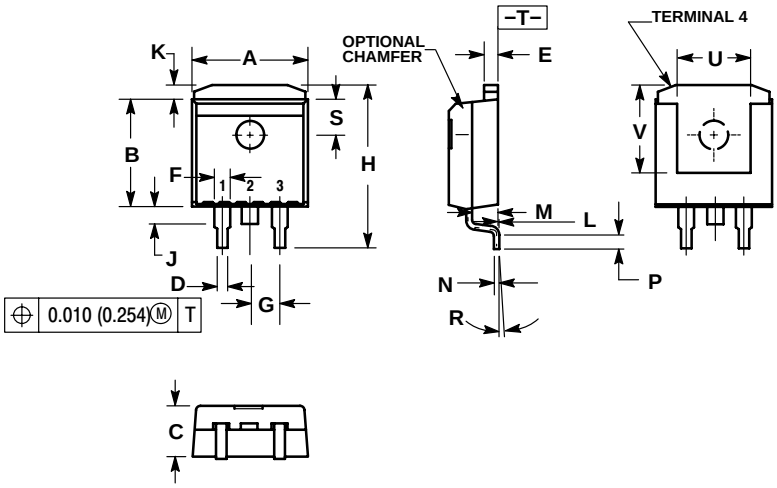

NOTES:
1. DIMENSIONING AND TOLERANCING PER ANSI Y14.5M, 1982.
2. CONTROLLING DIMENSION: INCH.
3. TAB CONTOUR OPTIONAL WITHIN DIMENSIONS A AND K.
4. DIMENSIONS U AND V ESTABLISH A MINIMUM MOUNTING SURFACE FOR TERMINAL 4.
5. DIMENSIONS A AND B DO NOT INCLUDE MOLD FLASH OR GATE PROTRUSIONS. MOLD FLASH AND GATE PROTRUSIONS NOT TO EXCEED 0.025 (0.635) MAXIMUM.

	INCHES		MILLIMETERS	
DIM	MIN	MAX	MIN	MAX
A	0.386	0.403	9.804	10.236
B	0.356	0.368	9.042	9.347
C	0.170	0.180	4.318	4.572
D	0.026	0.036	0.660	0.914
E	0.045	0.055	1.143	1.397
F	0.051 REF		1.295 REF	
G	0.100 BSC		2.540 BSC	
H	0.539	0.579	13.691	14.707
J	0.125 MAX		3.175 MAX	
K	0.050 REF		1.270 REF	
L	0.000	0.010	0.000	0.254
M	0.088	0.102	2.235	2.591
N	0.018	0.026	0.457	0.660
P	0.058	0.078	1.473	1.981
R	5° REF		5° REF	
S	0.116 REF		2.946 REF	
U	0.200 MIN		5.080 MIN	
V	0.250 MIN		6.350 MIN	

SOLDERING FOOTPRINT*

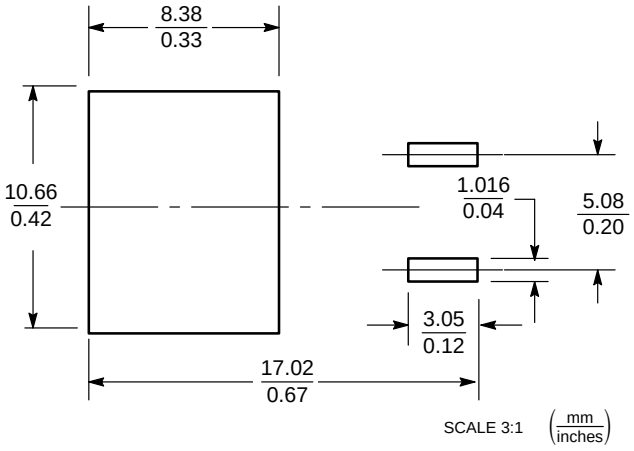

*For additional information on our Pb−Free strategy and soldering details, please download the ON Semiconductor Soldering and Mounting Techniques Reference Manual, SOLDERRM/D.

PACKAGE DIMENSIONS

TO−220
T SUFFIX
PLASTIC PACKAGE
CASE 221A−09
ISSUE AA

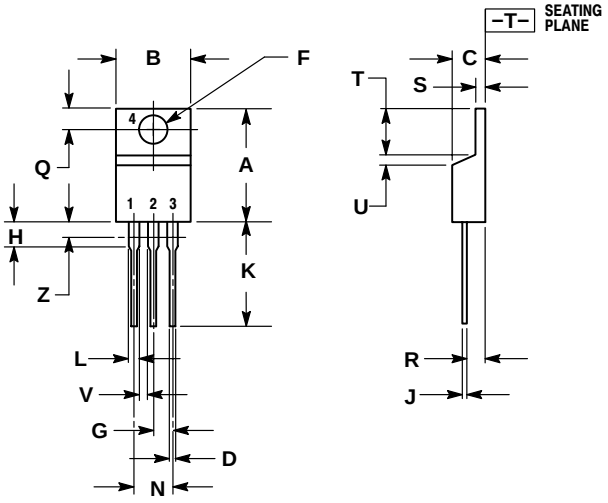

NOTES:
1. DIMENSIONING AND TOLERANCING PER ANSI Y14.5M, 1982.
2. CONTROLLING DIMENSION: INCH.
3. DIMENSION Z DEFINES A ZONE WHERE ALL BODY AND LEAD IRREGULARITIES ARE ALLOWED.

	INCHES		MILLIMETERS	
DIM	MIN	MAX	MIN	MAX
A	0.570	0.620	14.48	15.75
B	0.380	0.405	9.66	10.28
C	0.160	0.190	4.07	4.82
D	0.025	0.035	0.64	0.88
F	0.142	0.147	3.61	3.73
G	0.095	0.105	2.42	2.66
H	0.110	0.155	2.80	3.93
J	0.018	0.025	0.46	0.64
K	0.500	0.562	12.70	14.27
L	0.045	0.060	1.15	1.52
N	0.190	0.210	4.83	5.33
Q	0.100	0.120	2.54	3.04
R	0.080	0.110	2.04	2.79
S	0.045	0.055	1.15	1.39
T	0.235	0.255	5.97	6.47
U	0.000	0.050	0.00	1.27
V	0.045	---	1.15	---
Z	---	0.080	---	2.04

ON Semiconductor and are registered trademarks of Semiconductor Components Industries, LLC (SCILLC). SCILLC reserves the right to make changes without further notice to any products herein. SCILLC makes no warranty, representation or guarantee regarding the suitability of its products for any particular purpose, nor does SCILLC assume any liability arising out of the application or use of any product or circuit, and specifically disclaims any and all liability, including without limitation special, consequential or incidental damages. “Typical” parameters which may be provided in SCILLC data sheets and/or specifications can and do vary in different applications and actual performance may vary over time. All operating parameters, including “Typicals” must be validated for each customer application by customer’s technical experts. SCILLC does not convey any license under its patent rights nor the rights of others. SCILLC products are not designed, intended, or authorized for use as components in systems intended for surgical implant into the body, or other applications intended to support or sustain life, or for any other application in which the failure of the SCILLC product could create a situation where personal injury or death may occur. Should Buyer purchase or use SCILLC products for any such unintended or unauthorized application, Buyer shall indemnify and hold SCILLC and its officers, employees, subsidiaries, affiliates, and distributors harmless against all claims, costs, damages, and expenses, and reasonable attorney fees arising out of, directly or indirectly, any claim of personal injury or death associated with such unintended or unauthorized use, even if such claim alleges that SCILLC was negligent regarding the design or manufacture of the part. SCILLC is an Equal Opportunity/Affirmative Action Employer. This literature is subject to all applicable copyright laws and is not for resale in any manner.

PUBLICATION ORDERING INFORMATION

LITERATURE FULFILLMENT:
Literature Distribution Center for ON Semiconductor
P.O. Box 5163, Denver, Colorado 80217 USA
Phone: 303−675−2175 or 800−344−3860 Toll Free USA/Canada
Fax: 303−675−2176 or 800−344−3867 Toll Free USA/Canada
Email: orderlit@onsemi.com

N. American Technical Support: 800−282−9855 Toll Free USA/Canada

Japan: ON Semiconductor, Japan Customer Focus Center
2−9−1 Kamimeguro, Meguro−ku, Tokyo, Japan 153−0051
Phone: 81−3−5773−3850

ON Semiconductor Website: http://onsemi.com

Order Literature: http://www.onsemi.com/litorder

For additional information, please contact your local Sales Representative.