MOTOROLA

MC1458, C

Internally Compensated, High Performance Dual Operational Amplifiers

The MC1458, C was designed for use as a summing amplifier, integrator, or amplifier with operating characteristics as a function of the external feedback components.

- No Frequency Compensation Required
- Short Circuit Protection
- Wide Common Mode and Differential Voltage Ranges
- Low Power Consumption
- No Latch–Up

DUAL OPERATIONAL AMPLIFIERS
(DUAL MC1741)

SEMICONDUCTOR TECHNICAL DATA

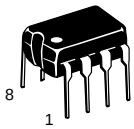

P1 SUFFIX
PLASTIC PACKAGE
CASE 626

D SUFFIX
PLASTIC PACKAGE
CASE 751
(SO–8)

MAXIMUM RATINGS (T_A = +25°C, unless otherwise noted.)

Rating	Symbol	Value	Unit
Power Supply Voltage	V_{CC} V_{EE}	+18 –18	Vdc
Input Differential Voltage	V_{ID}	±30	V
Input Common Mode Voltage (Note 1)	V_{ICM}	±15	V
Output Short Circuit Duration (Note 2)	t_{SC}	Continuous	
Operating Ambient Temperature Range	T_A	0 to +70	°C
Storage Temperature Range	T_{stg}	–55 to +125	°C
Junction Temperature	T_J	150	°C

NOTES: 1. For supply voltages less than ±15 V, the absolute maximum input voltage is equal to the supply voltage.
2. Supply voltage equal to or less than 15 V.

PIN CONNECTIONS

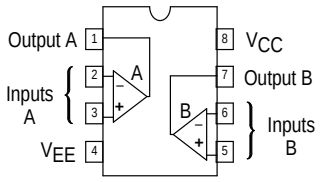

Representative Schematic Diagram

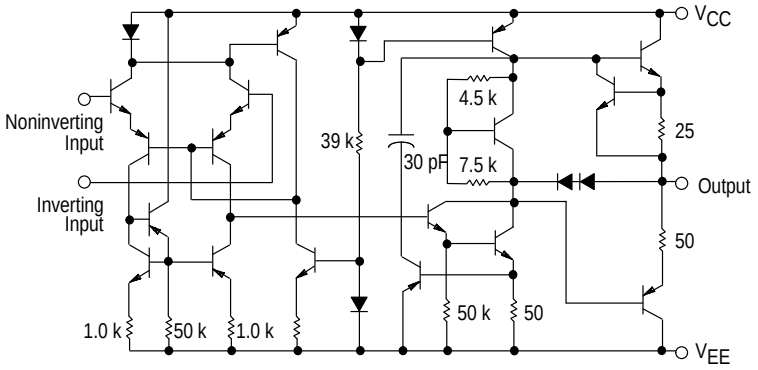

ORDERING INFORMATION

Device	Operating Temperature Range	Package
MC1458CD, D	T_A = 0° to +70°C	SO–8
MC1458CP1, P1		Plastic DIP

© Motorola, Inc. 1996

ELECTRICAL CHARACTERISTICS (V_{CC} = +15 V, V_{EE} = –15 V, T_A = 25°C, unless otherwise noted. (Note 3))

Characteristic	Symbol	MC1458			MC1458C			Unit
		Min	Typ	Max	Min	Typ	Max	
Input Offset Voltage (R_S ≤ 10 k)	V_{IO}	–	2.0	6.0	–	2.0	1.0	mV
Input Offset Current	I_{IO}	–	20	200	–	20	300	nA
Input Bias Current	I_{IB}	–	80	500	–	80	700	nA
Input Resistance	r_i	0.3	2.0	–	–	2.0	–	MΩ
Input Capacitance	C_i	–	1.4	–	–	1.4	–	pF
Offset Voltage Adjustment Range	V_{IOR}	–	±15	–	–	±15	–	mV
Common Mode Input Voltage Range	V_{ICR}	±12	±13	–	±11	±13	–	V
Large Signal Voltage Gain	A_{VOL}							V/mV
(V_O = ±10 V, R_L = 2.0 k)		20	200	–	–	–	–	
(V_O = ±10 V, R_L = 10 k)		–	–	–	20	200	–	
Output Resistance	r_o	–	75	–	–	75	–	Ω
Common Mode Rejection (R_S ≤ 10 k)	CMR	70	90	–	60	90	–	dB
Supply Voltage Rejection (R_S ≤ 10 k)	PSR	–	30	150	–	30	–	μV/V
Output Voltage Swing	V_O							V
(R_S ≤ 10 k)		±12	±14	–	±11	±14	–	
(R_S ≤ 2.0 k)		±10	±13	–	±9.0	±13	–	
Output Short Circuit Current	I_{SC}	–	20	–	–	20	–	mA
Supply Currents (Both Amplifiers)	I_D	–	2.3	5.6	–	2.3	8.0	mA
Power Consumption	P_C	–	70	170	–	70	240	mW
Transient Response (Unity Gain)								
(V_I = 20 mV, R_L ≥ 2.0 kΩ, C_L ≤ 100 pF) Rise Time	t_{TLH}	–	0.3	–	–	0.3	–	μs
(V_I = 20 mV, R_L ≥ 2.0 kΩ, C_L ≤ 100 pF) Overshoot	os	–	15	–	–	15	–	%
(V_I = 10 V, R_L ≥ 2.0 kΩ, C_L ≤ 100 pF) Slew Rate	SR	–	0.5	–	–	0.5	–	V/μs

ELECTRICAL CHARACTERISTICS (V_{CC} = +15 V, V_{EE} = –15 V, T_A = T_{high} to T_{low}, unless otherwise noted. (Note 3))*

Characteristic	Symbol	MC1458			MC1458C			Unit
		Min	Typ	Max	Min	Typ	Max	
Input Offset Voltage (R_S ≤ 10 kΩ)	V_{IO}	–	–	7.5	–	–	12	mV
Input Offset Current (T_A = 0° to +70°C)	I_{IO}	–	–	300	–	–	400	nA
Input Bias Current (T_A = 0° to +70°C)	I_{IB}	–	–	800	–	–	1000	nA
Output Voltage Swing	V_O							V
(R_S ≤ 10 k)		±12	±14	–	–	–	–	
(R_S ≤ 2 k)		±10	±13	–	±9.0	±13	–	
Large Signal Voltage Gain	A_{VOL}							V/mV
(V_O = ±10 V, R_L = 2 k)		15	–	–	–	–	–	
(V_O = ±10 V, R_L = 10 k)		–	–	–	15	–	–	

*T_{low} = 0°C for MC1458, C T_{high} = +70°C for MC1458, C

NOTE: 3. Input pins of an unused amplifier must be grounded for split supply operation or biased at least 3.0 V above V_{EE} for single supply operation.

Figure 1. Burst Noise versus Source Resistance

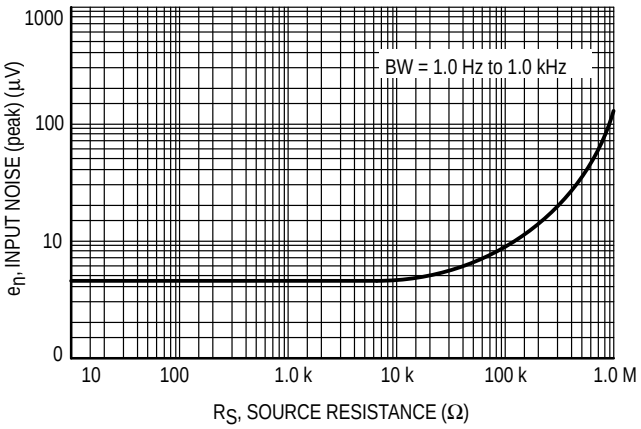

Figure 2. RMS Noise versus Source Resistance

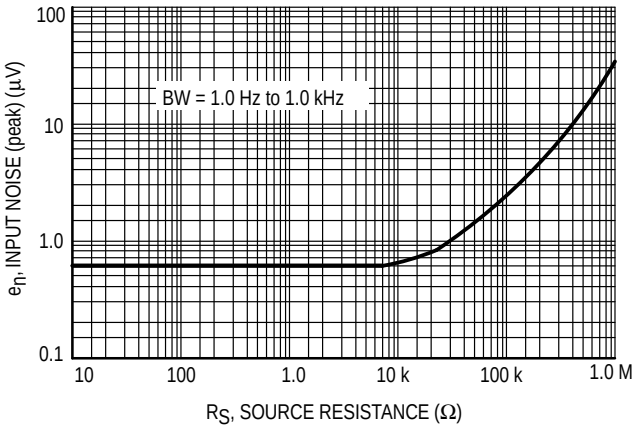

Figure 3. Output Noise versus Source Resistance

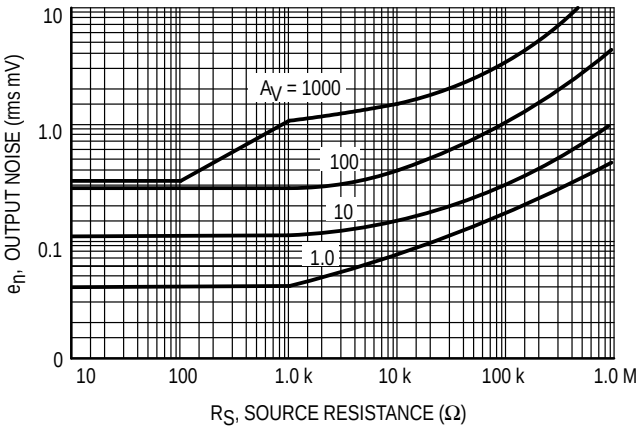

Figure 4. Spectral Noise Density

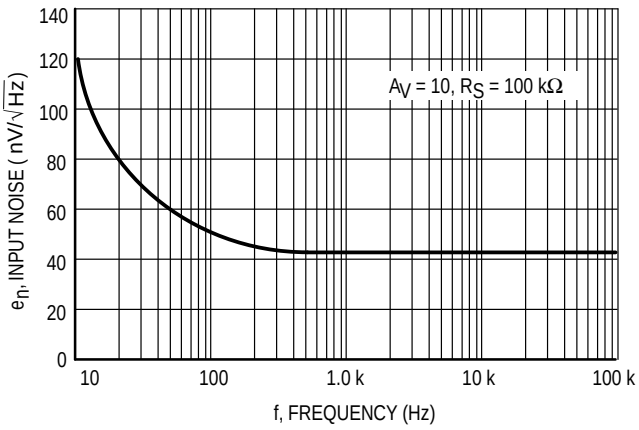

Figure 5. Burst Noise Test Circuit

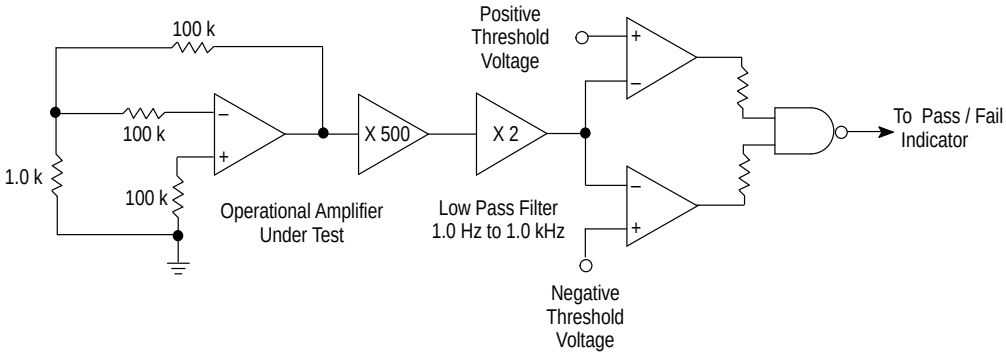

Unlike conventional peak reading or RMS meters, this system was especially designed to provide the quick response time essential to burst (popcorn) noise testing.

The test time employed is 10 sec and the 20 µV peak limit refers to the operational amplifier input thus eliminating errors in the closed loop gain factor of the operational amplifier .

Figure 6. Power Bandwidth (Large Signal Swing versus Frequency)

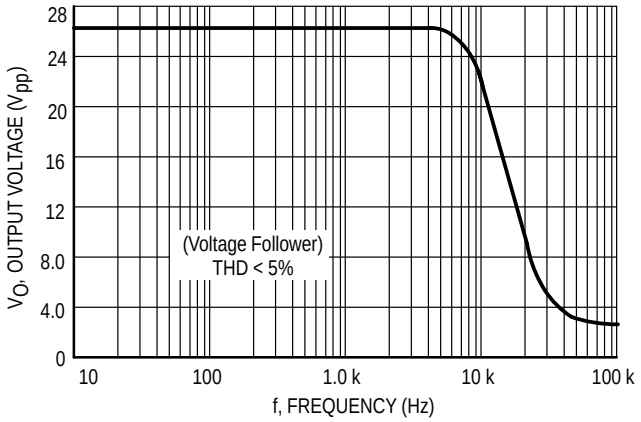

Figure 7. Open Loop Frequency Response

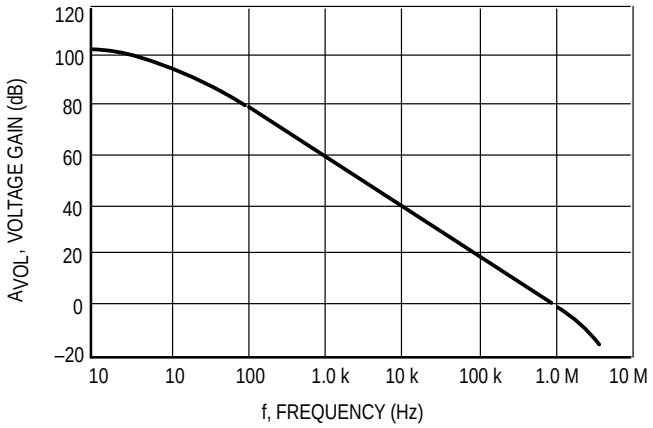

Figure 8. Positive Output Voltage Swing versus Load Resistance

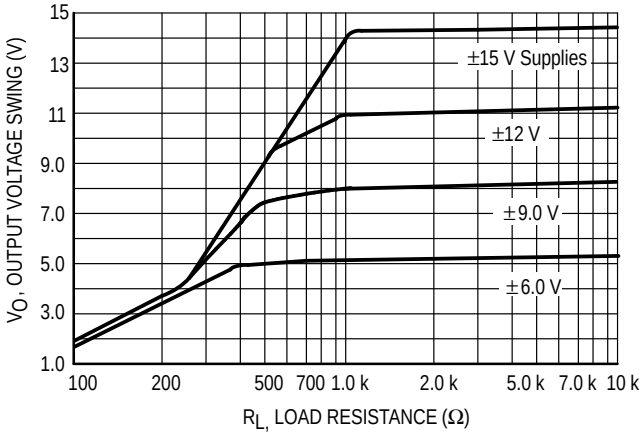

Figure 9. Negative Output Voltage Swing versus Load Resistance

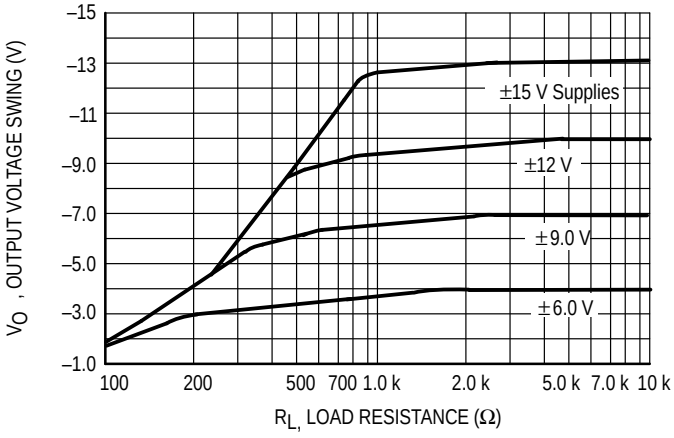

Figure 10. Output Voltage Swing versus Load Resistance (Single Supply Operation)

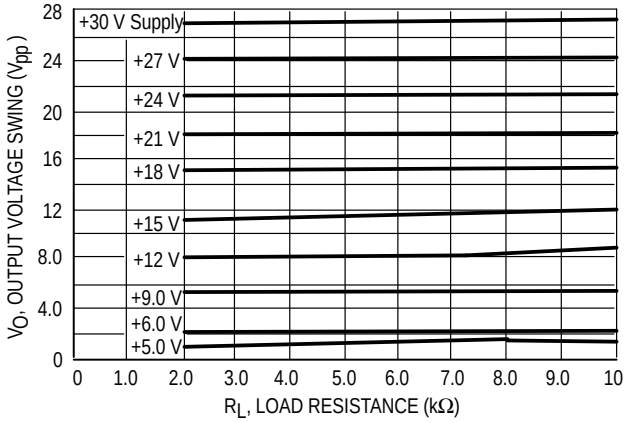

Figure 11. Single Supply Inverting Amplifier

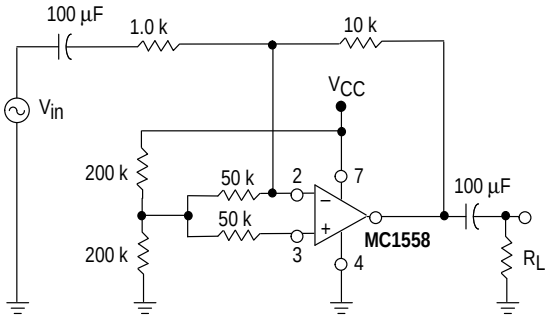

Figure 12. Noninverting Pulse Response

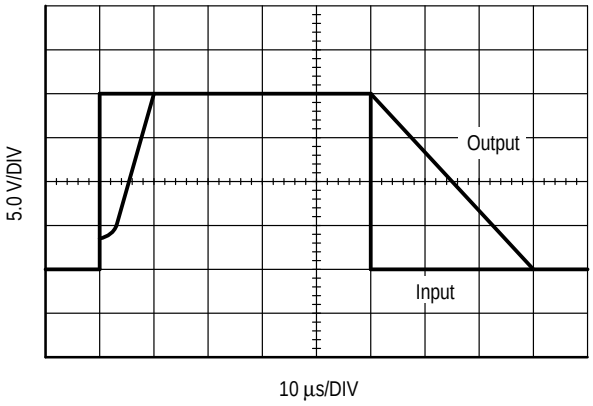

Figure 13. Transient Response Test Circuit

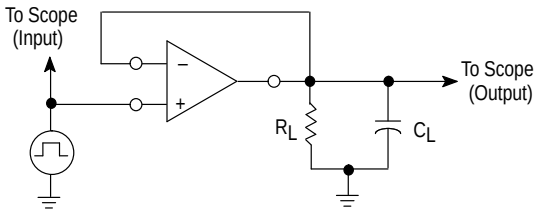

Figure 14. Unused OpAmp

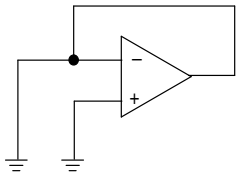

Figure 15. Open Loop Voltage Gain versus Supply Voltage

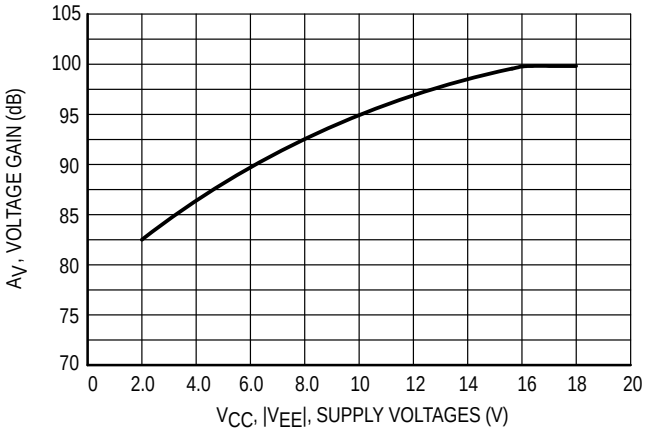

OUTLINE DIMENSIONS

P1 SUFFIX
PLASTIC PACKAGE
CASE 626–05
ISSUE K

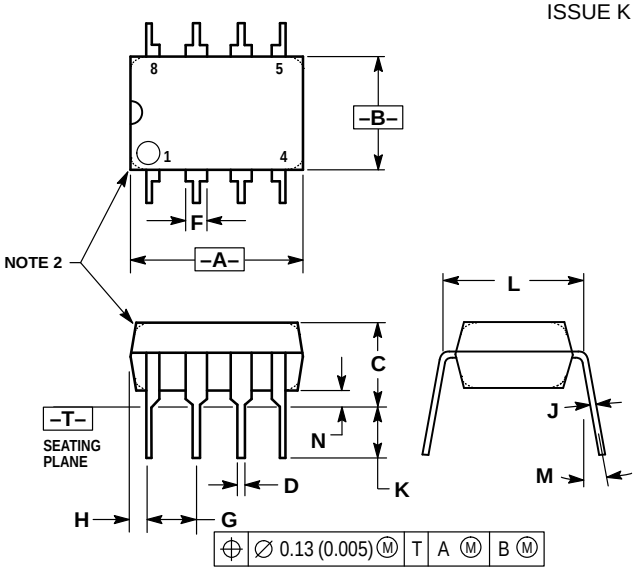

NOTES:
1. DIMENSION L TO CENTER OF LEAD WHEN FORMED PARALLEL.
2. PACKAGE CONTOUR OPTIONAL (ROUND OR SQUARE CORNERS).
3. DIMENSIONING AND TOLERANCING PER ANSI Y14.5M, 1982.

	MILLIMETERS		INCHES	
DIM	MIN	MAX	MIN	MAX
A	9.40	10.16	0.370	0.400
B	6.10	6.60	0.240	0.260
C	3.94	4.45	0.155	0.175
D	0.38	0.51	0.015	0.020
F	1.02	1.78	0.040	0.070
G	2.54 BSC		0.100 BSC	
H	0.76	1.27	0.030	0.050
J	0.20	0.30	0.008	0.012
K	2.92	3.43	0.115	0.135
L	7.62 BSC		0.300 BSC	
M	—	10°	—	10°
N	0.76	1.01	0.030	0.040

D SUFFIX
PLASTIC PACKAGE
CASE 751–05
(SO–8)
ISSUE R

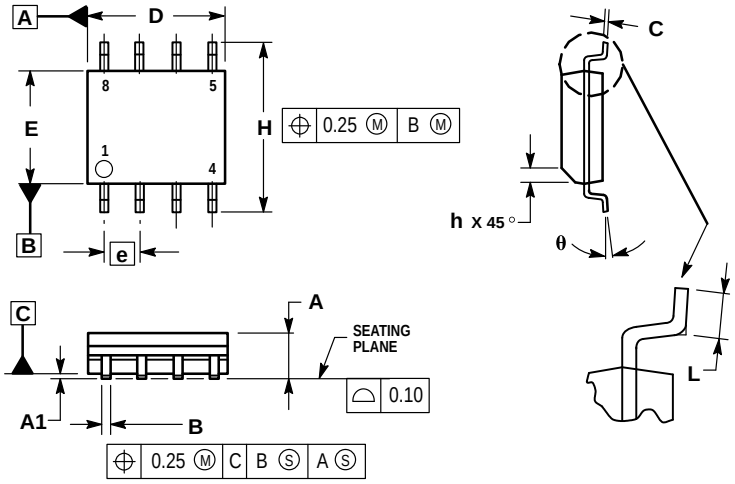

NOTES:
1. DIMENSIONING AND TOLERANCING PER ASME Y14.5M, 1994.
2. DIMENSIONS ARE IN MILLIMETERS.
3. DIMENSION D AND E DO NOT INCLUDE MOLD PROTRUSION.
4. MAXIMUM MOLD PROTRUSION 0.15 PER SIDE.
5. DIMENSION B DOES NOT INCLUDE MOLD PROTRUSION. ALLOWABLE DAMBAR PROTRUSION SHALL BE 0.127 TOTAL IN EXCESS OF THE B DIMENSION AT MAXIMUM MATERIAL CONDITION.

	MILLIMETERS	
DIM	MIN	MAX
A	1.35	1.75
A1	0.10	0.25
B	0.35	0.49
C	0.18	0.25
D	4.80	5.00
E	3.80	4.00
e	1.27 BSC	
H	5.80	6.20
h	0.25	0.50
L	0.40	1.25
θ	0°	7°

Motorola reserves the right to make changes without further notice to any products herein. Motorola makes no warranty, representation or guarantee regarding the suitability of its products for any particular purpose, nor does Motorola assume any liability arising out of the application or use of any product or circuit, and specifically disclaims any and all liability, including without limitation consequential or incidental damages. "Typical" parameters which may be provided in Motorola data sheets and/or specifications can and do vary in different applications and actual performance may vary over time. All operating parameters, including "Typicals" must be validated for each customer application by customer's technical experts. Motorola does not convey any license under its patent rights nor the rights of others. Motorola products are not designed, intended, or authorized for use as components in systems intended for surgical implant into the body, or other applications intended to support or sustain life, or for any other application in which the failure of the Motorola product could create a situation where personal injury or death may occur. Should Buyer purchase or use Motorola products for any such unintended or unauthorized application, Buyer shall indemnify and hold Motorola and its officers, employees, subsidiaries, affiliates, and distributors harmless against all claims, costs, damages, and expenses, and reasonable attorney fees arising out of, directly or indirectly, any claim of personal injury or death associated with such unintended or unauthorized use, even if such claim alleges that Motorola was negligent regarding the design or manufacture of the part. Motorola and Ⓜ are registered trademarks of Motorola, Inc. Motorola, Inc. is an Equal Opportunity/Affirmative Action Employer.

How to reach us:
USA / EUROPE / Locations Not Listed: Motorola Literature Distribution;
P.O. Box 20912; Phoenix, Arizona 85036. 1–800–441–2447 or 602–303–5454

MFAX: RMFAX0@email.sps.mot.com – TOUCHTONE 602–244–6609
INTERNET: http://Design–NET.com

JAPAN: Nippon Motorola Ltd.; Tatsumi–SPD–JLDC, 6F Seibu–Butsuryu–Center,
3–14–2 Tatsumi Koto–Ku, Tokyo 135, Japan. 03–81–3521–8315

ASIA / PACIFIC: Motorola Semiconductors H.K. Ltd.; 8B Tai Ping Industrial Park,
51 Ting Kok Road, Tai Po, N.T., Hong Kong. 852–26629298