National Semiconductor

May 2004

LM20EP
Enhanced Plastic 2.4V, 10µA, SC70, micro SMD Temperature Sensor

General Description

The LM20EP is a precision analog output CMOS integrated-circuit temperature sensor that operates over a −55˚C to +130˚C temperature range. The power supply operating range is +2.4 V to +5.5 V. The transfer function of LM20EP is predominately linear, yet has a slight predictable parabolic curvature. The accuracy of the LM20EP when specified to a parabolic transfer function is ±1.5˚C at an ambient temperature of +30˚C. The temperature error increases linearly and reaches a maximum of ±2.5˚C at the temperature range extremes. The temperature range is affected by the power supply voltage. At a power supply voltage of 2.7 V to 5.5 V the temperature range extremes are +130˚C and −55˚C. Decreasing the power supply voltage to 2.4 V changes the negative extreme to −30˚C, while the positive remains at +130˚C.

The LM20EP's quiescent current is less than 10 µA. Therefore, self-heating is less than 0.02˚C in still air. Shutdown capability for the LM20EP is intrinsic because its inherent low power consumption allows it to be powered directly from the output of many logic gates or does not necessitate shutdown at all.

ENHANCED PLASTIC

- Extended Temperature Performance of −55˚C to +130˚C
- Baseline Control - Single Fab & Assembly Site
- Process Change Notification (PCN)
- Qualification & Reliability Data
- Solder (PbSn) Lead Finish is standard
- Enhanced Diminishing Manufacturing Sources (DMS) Support

Features

- Rated for full −55˚C to +130˚C range
- Available in an SC70 and a micro SMD package
- Predictable curvature error
- Suitable for remote applications

Key Specifications

Accuracy at +30˚C	±1.5 to ±4 ˚C (max)
Accuracy at +130˚C & −55˚C	±2.5 to ±5 ˚C (max)
Power Supply Voltage Range	+2.4V to +5.5V
Current Drain	10 µA (max)
Nonlinearity	±0.4 % (typ)
Output Impedance	160 Ω (max)
Load Regulation 0 µA < I_L < +16 µA	−2.5 mV (max)

Applications

- Battery Management
- Selected Military Applications
- Selected Avionics Applications

Ordering Information

PART NUMBER	VID PART NUMBER	NS PACKAGE NUMBER (Note 3)
LM20CIM7EP	V62/04728-01	MAA05A
(Notes 1, 2)	TBD	TBD

Note 1: For the following (Enhanced Plastic) version, check for availability: LM20SIBPEP, LM20SIBPXEP, LM20BIM7EP, LM20BIM7XEP, LM20CIM7XEP, LM20SITLEP, LM20SITLXEP. Parts listed with an "X" are provided in Tape & Reel and parts without an "X" are in Rails.

Note 2: FOR ADDITIONAL ORDERING AND PRODUCT INFORMATION, PLEASE VISIT THE ENHANCED PLASTIC WEB SITE AT: www.national.com/mil

Note 3: Refer to package details under Physical Dimensions

© 2004 National Semiconductor Corporation

Typical Application

Full-Range Celsius (Centigrade) Temperature Sensor (–55˚C to +130˚C) Operating from a Single Li-Ion Battery Cell

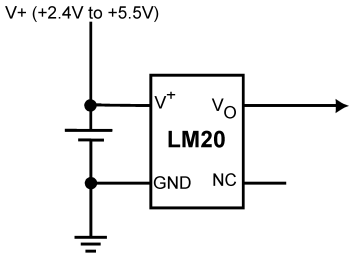

20099902

$$V_O = (-3.88x10^{-6}xT^2) + (-1.15x10^{-2}xT) + 1.8639$$

$$T = -1481.96 + \sqrt{2.1962 \times 10^6 + \frac{(1.8639 - V_O)}{3.88 \times 10^{-6}}}$$

Output Voltage vs Temperature

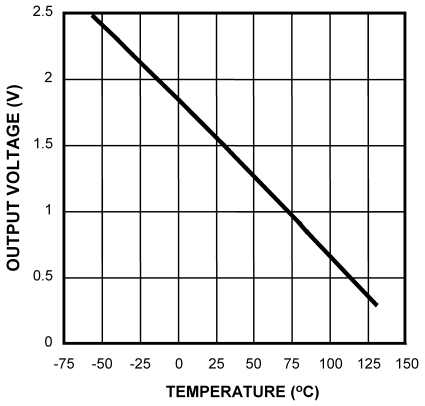

20099924

where:

T is temperature, and V_O is the measured output voltage of the LM20EP.

Temperature (T)	Typical V_O
+130˚C	+303 mV
+100˚C	+675 mV
+80˚C	+919 mV
+30˚C	+1515 mV
+25˚C	+1574 mV
0˚C	+1863.9 mV
–30˚C	+2205 mV
–40˚C	+2318 mV
–55˚C	+2485 mV

Connection Diagrams

SC70-5

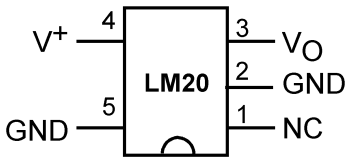

20099901

Note:

- GND (pin 2) may be grounded or left floating. For optimum thermal conductivity to the pc board ground plane pin 2 should be grounded.
- NC (pin 1) should be left floating or grounded. Other signal traces should not be connected to this pin.

Top View
See NS Package Number MAA05A

micro SMD

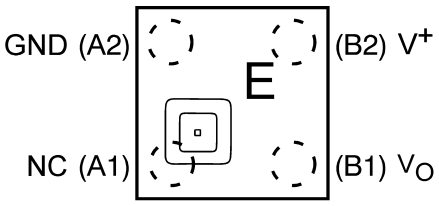

20099932

Note:

- Pin numbers are referenced to the package marking text orientation.
- Reference JEDEC Registration MO-211, variation BA
- The actual physical placement of package marking will vary slightly from part to part. The package marking will designate the date code and will vary considerably. Package marking does not correlate to device type in any way.

Top View
See NS Package Number BPA04DDC and TLA04ZZA

Absolute Maximum Ratings (Note 4)

If Military/Aerospace specified devices are required, please contact the National Semiconductor Sales Office/ Distributors for availability and specifications.

Supply Voltage	+6.5V to −0.2V
Output Voltage	(V^+ + 0.6 V) to −0.6 V
Output Current	10 mA
Input Current at any pin (Note 5)	5 mA
Storage Temperature	−65˚C to +150˚C
Maximum Junction Temperature (T_{JMAX})	+150˚C
ESD Susceptibility (Note 6) :	
Human Body Model	2500 V
Machine Model	250 V
Lead Temperature	
SC-70 Package (Note 7) :	
Vapor Phase (60 seconds)	+215˚C
Infrared (15 seconds)	+220˚C

Operating Ratings (Note 4)

Specified Temperature Range:	$T_{MIN} \le T_A \le T_{MAX}$
LM20BEP, LM20CEP with 2.4 V ≤ V^+ ≤ 2.7 V	−30˚C ≤ T_A ≤ +130˚C
LM20BEP, LM20CEP with 2.7 V ≤ V^+ ≤ 5.5 V	−55˚C ≤ T_A ≤ +130˚C
LM20SEP with 2.4 V ≤ V^+ ≤ 5.5 V	−30˚C ≤ T_A ≤ +125˚C
LM20SEP with 2.7 V ≤ V^+ ≤ 5.5 V	−40˚C ≤ T_A ≤ +125˚C
Supply Voltage Range (V^+)	+2.4 V to +5.5 V
Thermal Resistance, θ_{JA} (Note 8)	
SC-70	415˚C/W
micro SMD	340˚C/W

Electrical Characteristics

Unless otherwise noted, these specifications apply for V^+ = +2.7 V_{DC}. **Boldface limits apply for $T_A = T_J = T_{MIN}$ to T_{MAX}** ; all other limits $T_A = T_J$ = 25˚C; Unless otherwise noted.

Parameter	Conditions	Typical (Note 9)	LM20BEP Limits (Note 10)	LM20CEP Limits (Note 10)	LM20SEP Limits (Note 10)	Units (Limit)
Temperature to Voltage Error $V_O = (-3.88x10^{-6}xT^2) + (-1.15x10^{-2}xT) + 1.8639V$ (Note 11)	T_A = +25˚C to +30˚C		±1.5	±4.0	±2.5	˚C (max)
	T_A = +130˚C		**±2.5**	**±5.0**		˚C (max)
	T_A = +125˚C		**±2.5**	**±5.0**	**±3.5**	˚C (max)
	T_A = +100˚C		**±2.2**	**±4.7**	**±3.2**	˚C (max)
	T_A = +85˚C		**±2.1**	**±4.6**	**±3.1**	˚C (max)
	T_A = +80˚C		**±2.0**	**±4.5**	**±3.0**	˚C (max)
	T_A = 0˚C		**±1.9**	**±4.4**	**±2.9**	˚C (max)
	T_A = −30˚C		**±2.2**	**±4.7**	**±3.3**	˚C (min)
	T_A = −40˚C		**±2.3**	**±4.8**	**±3.5**	˚C (max)
	T_A = −55˚C		**±2.5**	**±5.0**		˚C (max)
Output Voltage at 0˚C		+1.8639				V
Variance from Curve		±1.0				˚C
Non-Linearity (Note 12)	−20˚C ≤ T_A ≤ +80˚C	±0.4				%
Sensor Gain (Temperature Sensitivity or Average Slope) to equation: V_O=−11.77 mV/˚CxT+1.860V	−30˚C ≤ T_A ≤ +100˚C	−11.77	**−11.4** **−12.2**	**−11.0** **−12.6**	**−11.0** **−12.6**	mV/˚C (min) mV/˚C (max)
Output Impedance	0 µA ≤ I_L ≤ +16 µA (Notes 14, 15)		**160**	**160**	**160**	Ω (max)
Load Regulation(Note 13)	0 µA ≤ I_L ≤ +16 µA (Notes 14, 15)		**−2.5**	**−2.5**	**−2.5**	mV (max)
Line Regulation	+2. 4 V ≤ V^+ ≤ +5.0V		**+3.3**	**+3.7**	**+3.7**	mV/V (max)
	+5.0 V ≤ V^+ ≤ +5.5 V		**+11**	**+11**	**+11**	mV (max)
Quiescent Current	+2. 4V ≤ V^+ ≤ +5.0V	4.5	7	7	7	µA (max)
	+5.0V ≤ V^+ ≤ +5.5V	4.5	9	9	9	µA (max)
	+2. 4V ≤ V^+ ≤ +5.0V	4.5	**10**	**10**	**10**	µA (max)
Change of Quiescent Current	+2. 4 V ≤ V^+ ≤ +5.5V	+0.7				µA
Temperature Coefficient of		−11				nA/˚C

Electrical Characteristics (Continued)

Unless otherwise noted, these specifications apply for V^+ = +2.7 V_{DC}. **Boldface limits apply for $T_A = T_J = T_{MIN}$ to T_{MAX}** ; all other limits $T_A = T_J$ = 25˚C; Unless otherwise noted.

Parameter	Conditions	Typical (Note 9)	LM20BEP Limits (Note 10)	LM20CEP Limits (Note 10)	LM20SEP Limits (Note 10)	Units (Limit)
Quiescent Current						
Shutdown Current	$V^+ \leq$ +0.8 V	0.02				µA

Note 4: Absolute Maximum Ratings indicate limits beyond which damage to the device may occur. Operating Ratings indicate conditions for which the device is functional, but do not guarantee specific performance limits. For guaranteed specifications and test conditions, see the Electrical Characteristics. The guaranteed specifications apply only for the test conditions listed. Some performance characteristics may degrade when the device is not operated under the listed test conditions.

Note 5: When the input voltage (V_I) at any pin exceeds power supplies (V_I < GND or V_I > V^+), the current at that pin should be limited to 5 mA.

Note 6: The human body model is a 100 pF capacitor discharged through a 1.5 kΩ resistor into each pin. The machine model is a 200 pF capacitor discharged directly into each pin.

Note 7: See AN-450 "Surface Mounting Methods and Their Effect on Product Reliability" or the section titled "Surface Mount" found in any post 1986 National Semiconductor Linear Data Book for other methods of soldering surface mount devices.

Note 8: The junction to ambient thermal resistance (θ_{JA}) is specified without a heat sink in still air using the printed circuit board layout shown in *Figure 1*.

Note 9: Typicals are at $T_J = T_A$ = 25˚C and represent most likely parametric norm.

Note 10: Limits are guaranteed to National's AOQL (Average Outgoing Quality Level).

Note 11: Accuracy is defined as the error between the measured and calculated output voltage at the specified conditions of voltage, current, and temperature (expressed in˚C).

Note 12: Non-Linearity is defined as the deviation of the calculated output-voltage-versus-temperature curve from the best-fit straight line, over the temperature range specified.

Note 13: Regulation is measured at constant junction temperature, using pulse testing with a low duty cycle. Changes in output due to heating effects can be computed by multiplying the internal dissipation by the thermal resistance.

Note 14: Negative currents are flowing into the LM20EP. Positive currents are flowing out of the LM20EP. Using this convention the LM20EP can at most sink –1 µA and source +16 µA.

Note 15: Load regulation or output impedance specifications apply over the supply voltage range of +2.4V to +5.5V.

Note 16: Line regulation is calculated by subtracting the output voltage at the highest supply input voltage from the output voltage at the lowest supply input voltage.

Typical Performance Characteristic

Temperature Error vs Temperature

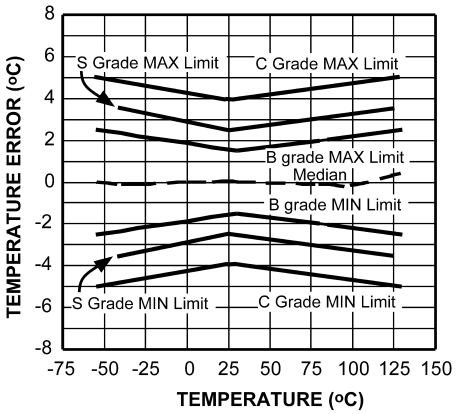

20099925

PCB Layouts Used for Thermal Measurements

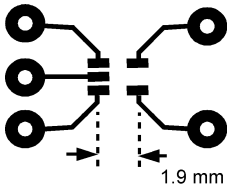

20099929

a) Layout used for no heat sink measurements.

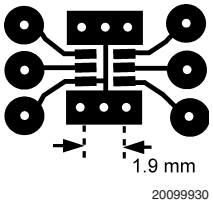

20099930

b) Layout used for measurements with small heat hink.

FIGURE 1. PCB Lyouts used for thermal measurements.

LM20EP Transfer Function

The LM20EP's transfer function can be described in different ways with varying levels of precision. A simple linear transfer function, with good accuracy near 25˚C, is

$$V_O = -11.69\ \text{mV/˚C} \times T + 1.8663\ \text{V}$$

Over the full operating temperature range of –55˚C to +130˚C, best accuracy can be obtained by using the parabolic transfer function

$$V_O = (-3.88\text{x}10^{-6}\text{x}T^2) + (-1.15\text{x}10^{-2}\text{x}T) + 1.8639$$

solving for T:

$$T = -1481.96 + \sqrt{2.1962 \times 10^6 + \frac{(1.8639 - V_O)}{3.88 \times 10^{-6}}}$$

A linear transfer function can be used over a limited temperature range by calculating a slope and offset that give best results over that range. A linear transfer function can be calculated from the parabolic transfer function of the LM20EP. The slope of the linear transfer function can be calculated using the following equation:

$$m = -7.76 \times 10^{-6} \text{x}\ T - 0.0115,$$

where T is the middle of the temperature range of interest and m is in V/˚C. For example for the temperature range of T_{min}=–30 to T_{max}=+100˚C:

$$T = 35˚C$$

and

$$m = -11.77\ \text{mV/˚C}$$

The offset of the linear transfer function can be calculated using the following equation:

$$b = (V_{OP}(T_{max}) + V_{OP}(T) + m \times (T_{max}+T))/2$$

,

where:

- $V_{OP}(T_{max})$ is the calculated output voltage at T_{max} using the parabolic transfer function for V_O
- $V_{OP}(T)$ is the calculated output voltage at T using the parabolic transfer function for V_O.

Using this procedure the best fit linear transfer function for many popular temperature ranges was calculated in *Figure 2*. As shown in *Figure 2* the error that is introduced by the linear transfer function increases with wider temperature ranges.

Temperature Range		Linear Equation	Maximum Deviation of Linear Equation
T_{min} (˚C)	T_{max} (˚C)	V_O=	from Parabolic Equation (˚C)
–55	+130	–11.79 mV/˚C x T + 1.8528 V	±1.41
–40	+110	–11.77 mV/˚C x T + 1.8577 V	±0.93
–30	+100	–11.77 mV/˚C x T + 1.8605 V	±0.70
-40	+85	–11.67 mV/˚C x T + 1.8583 V	±0.65
–10	+65	–11.71 mV/˚C x T + 1.8641 V	±0.23
+35	+45	–11.81 mV/˚C x T + 1.8701 V	±0.004
+20	+30	–11.69 mV/˚C x T + 1.8663 V	±0.004

FIGURE 2. First order equations optimized for different temperature ranges.

Mounting

The LM20EP can be applied easily in the same way as other integrated-circuit temperature sensors. It can be glued or cemented to a surface. The temperature that the LM20EP is sensing will be within about +0.02˚C of the surface temperature to which the LM20EP's leads are attached to.

This presumes that the ambient air temperature is almost the same as the surface temperature; if the air temperature were much higher or lower than the surface temperature, the actual temperature measured would be at an intermediate temperature between the surface temperature and the air temperature.

To ensure good thermal conductivity the backside of the LM20EP die is directly attached to the pin 2 GND pin. The tempertures of the lands and traces to the other leads of the LM20EP will also affect the temperature that is being sensed.

Alternatively, the LM20EP can be mounted inside a sealed-end metal tube, and can then be dipped into a bath or screwed into a threaded hole in a tank. As with any IC, the LM20EP and accompanying wiring and circuits must be kept insulated and dry, to avoid leakage and corrosion. This is especially true if the circuit may operate at cold temperatures where condensation can occur. Printed-circuit coatings and varnishes such as Humiseal and epoxy paints or dips are often used to ensure that moisture cannot corrode the LM20EP or its connections.

The thermal resistance junction to ambient (θ_{JA}) is the parameter used to calculate the rise of a device junction temperature due to its power dissipation. For the LM20EP the equation used to calculate the rise in the die temperature is as follows:

$$T_J = T_A + \theta_{JA}\ [(V^+ I_Q) + (V^+ - V_O)\ I_L]$$

where I_Q is the quiescent current and I_L is the load current on the output. Since the LM20EP's junction temperature is the actual temperature being measured care should be taken to minimize the load current that the LM20EP is required to drive.

The tables shown in *Figure 3* summarize the rise in die temperature of the LM20EP without any loading, and the thermal resistance for different conditions.

Mounting (Continued)

	SC70-5 no heat sink		SC70-5 small heat sink	
	θ_{JA} (˚C/W)	$T_J - T_A$ (˚C)	θ_{JA} (˚C/W)	$T_J - T_A$ (˚C)
Still air	412	0.2	350	0.19

	SC70-5 no heat sink		SC70-5 small heat sink	
	θ_{JA} (˚C/W)	$T_J - T_A$ (˚C)	θ_{JA} (˚C/W)	$T_J - T_A$ (˚C)
Moving air	312	0.17	266	0.15

See *Figure 1* for PCB layout samples.

	micro SMD no heat sink		micro SMD small heat fin	
	θ_{JA} (˚C/W)	$T_J - T_A$ (˚C)	θ_{JA} (˚C/W)	$T_J - T_A$ (˚C)
Still air	340	0.18	TBD	TBD

	micro SMD no heat sink		micro SMD small heat fin	
	θ_{JA} (˚C/W)	$T_J - T_A$ (˚C)	θ_{JA} (˚C/W)	$T_J - T_A$ (˚C)
Moving air	TBD	TBD	TBD	TBD

FIGURE 3. Temperature Rise of LM20EP Due to Self-Heating and Thermal Resistance (θ_{JA})

Capacitive Loads

The LM20EP handles capacitive loading well. Without any precautions, the LM20EP can drive any capacitive load less than 300 pF as shown in *Figure 4*. Over the specified temperature range the LM20EP has a maximum output impedance of 160 Ω. In an extremely noisy environment it may be necessary to add some filtering to minimize noise pickup. It is recommended that 0.1 µF be added from V^+ to GND to bypass the power supply voltage, as shown in *Figure 5*. In a noisy environment it may even be necessary to add a capacitor from the output to ground with a series resistor as shown in *Figure 5*. A 1 µF output capacitor with the 160 Ω maximum output impedance and a 200 Ω series resistor will form a 442 Hz lowpass filter. Since the thermal time constant of the LM20EP is much slower, the overall response time of the LM20EP will not be significantly affected.

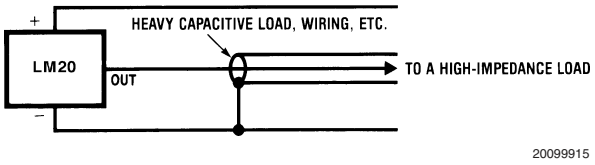

FIGURE 4. LM20EP No Decoupling Required for Capacitive Loads Less than 300 pF.

R (Ω)	C (µF)
200	1
470	0.1
680	0.01
1 k	0.001

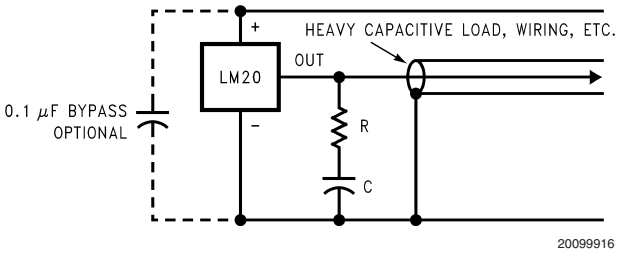

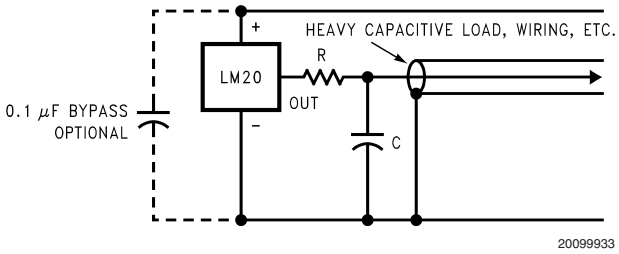

FIGURE 5. LM20EP with Filter for Noisy Environment and Capacitive Loading greater than 300 pF. Either placement of resistor as shown above is just as effective.

LM20EP micro SMD Light Sensitivity

Exposing the LM20EP micro SMD package to bright sunlight may cause the output reading of the LM20EP to drop by 1.5V. In a normal office environment of fluorescent lighting the output voltage is minimally affected (less than a millivolt drop). In either case it is recommended that the LM20EP micro SMD be placed inside an enclosure of some type that minimizes its light exposure. Most chassis provide more than ample protection. The LM20EP does not sustain permanent damage from light exposure. Removing the light source will cause LM20EP's output voltage to recover to the proper value.

Applications Circuits

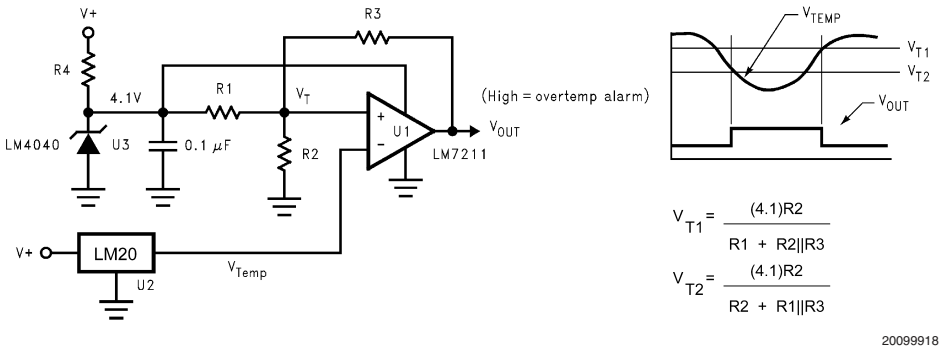

FIGURE 6. Centigrade Thermostat

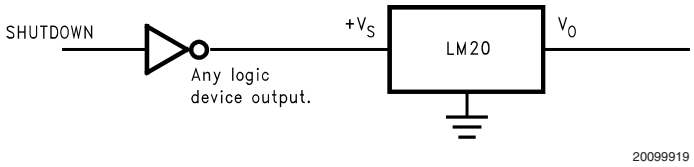

FIGURE 7. Conserving Power Dissipation with Shutdown

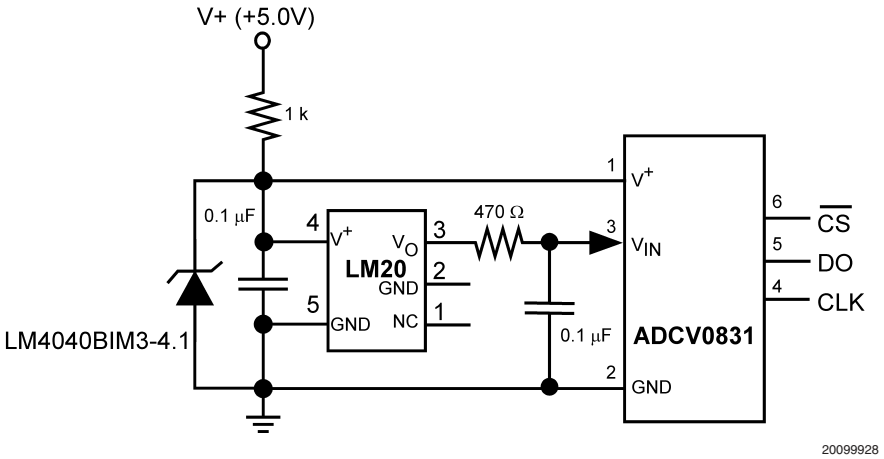

Most CMOS ADCs found in ASICs have a sampled data comparator input structure that is notorious for causing grief to analog output devices such as the LM20EP and many op amps. The cause of this grief is the requirement of instantaneous charge of the input sampling capacitor in the ADC. This requirement is easily accommodated by the addition of a capacitor. Since not all ADCs have identical input stages, the charge requirements will vary necessitating a different value of compensating capacitor. This ADC is shown as an example only. If a digital output temperature is required please refer to devices such as the LM74.

FIGURE 8. Suggested Connection to a Sampling Analog to Digital Converter Input Stage

Physical Dimensions inches (millimeters) unless otherwise noted

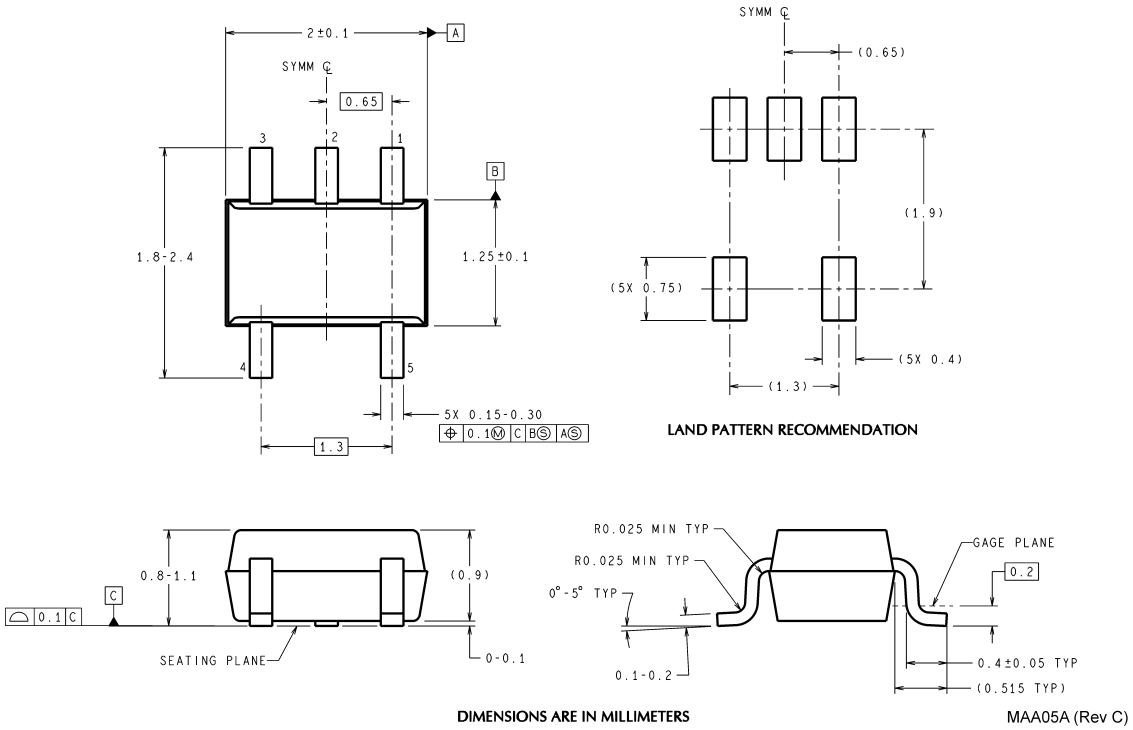

5-Lead SC70 Molded Package
NS Package Number MAA05A

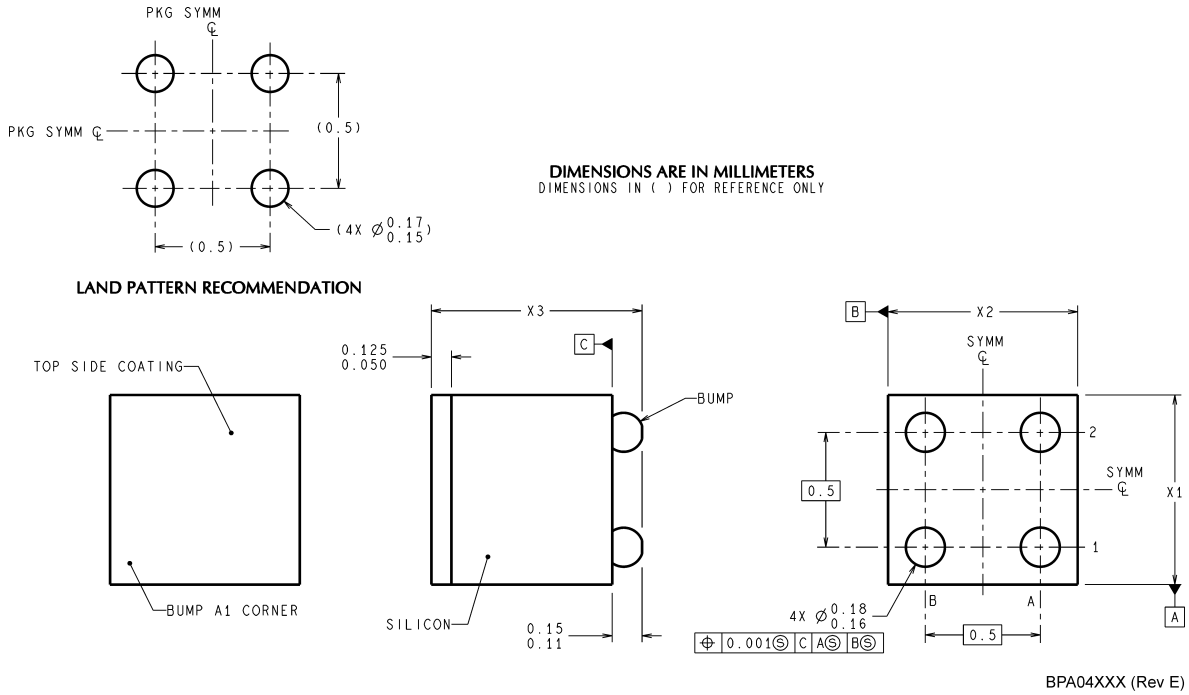

4-Bump micro SMD Ball Grid Array Package (Small Bump)
NS Package Number BPA04DDC
The following dimensions apply to the BPA04DDC package shown above: X1=X2 = 853µm ±30µm, X3= 900µm ±50µm

Physical Dimensions inches (millimeters) unless otherwise noted (Continued)

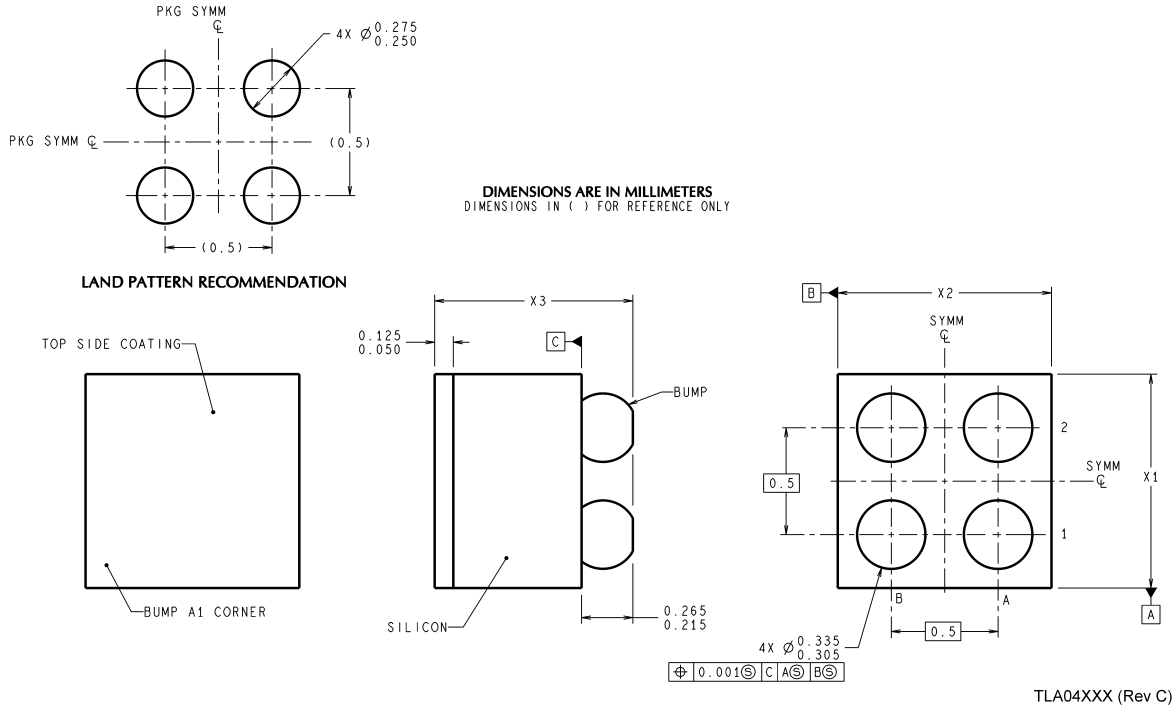

4-Bump micro SMD Ball Grid Array Package (Large Bump)
NS Package Number TLA04ZZA
The following dimensions apply to the TLA04ZZA package shown above: X1=X2 = 963µm ±30µm, X3= 600µm ±75µm

LIFE SUPPORT POLICY

NATIONAL'S PRODUCTS ARE NOT AUTHORIZED FOR USE AS CRITICAL COMPONENTS IN LIFE SUPPORT DEVICES OR SYSTEMS WITHOUT THE EXPRESS WRITTEN APPROVAL OF THE PRESIDENT AND GENERAL COUNSEL OF NATIONAL SEMICONDUCTOR CORPORATION. As used herein:

1. Life support devices or systems are devices or systems which, (a) are intended for surgical implant into the body, or (b) support or sustain life, and whose failure to perform when properly used in accordance with instructions for use provided in the labeling, can be reasonably expected to result in a significant injury to the user.
2. A critical component is any component of a life support device or system whose failure to perform can be reasonably expected to cause the failure of the life support device or system, or to affect its safety or effectiveness.

BANNED SUBSTANCE COMPLIANCE

National Semiconductor certifies that the products and packing materials meet the provisions of the Customer Products Stewardship Specification (CSP-9-111C2) and the Banned Substances and Materials of Interest Specification (CSP-9-111S2) and contain no "Banned Substances" as defined in CSP-9-111S2.

National Semiconductor
Americas Customer
Support Center
Email: new.feedback@nsc.com
Tel: 1-800-272-9959

www.national.com

National Semiconductor
Europe Customer Support Center
Fax: +49 (0) 180-530 85 86
Email: europe.support@nsc.com
Deutsch Tel: +49 (0) 69 9508 6208
English Tel: +44 (0) 870 24 0 2171
Français Tel: +33 (0) 1 41 91 8790

National Semiconductor
Asia Pacific Customer
Support Center
Email: ap.support@nsc.com

National Semiconductor
Japan Customer Support Center
Fax: 81-3-5639-7507
Email: jpn.feedback@nsc.com
Tel: 81-3-5639-7560

National does not assume any responsibility for use of any circuitry described, no circuit patent licenses are implied and National reserves the right at any time without notice to change said circuitry and specifications.