National Semiconductor

February 2000

LM555
Timer

General Description

The LM555 is a highly stable device for generating accurate time delays or oscillation. Additional terminals are provided for triggering or resetting if desired. In the time delay mode of operation, the time is precisely controlled by one external resistor and capacitor. For astable operation as an oscillator, the free running frequency and duty cycle are accurately controlled with two external resistors and one capacitor. The circuit may be triggered and reset on falling waveforms, and the output circuit can source or sink up to 200mA or drive TTL circuits.

Features

- Direct replacement for SE555/NE555
- Timing from microseconds through hours
- Operates in both astable and monostable modes
- Adjustable duty cycle
- Output can source or sink 200 mA
- Output and supply TTL compatible
- Temperature stability better than 0.005% per ˚C
- Normally on and normally off output
- Available in 8-pin MSOP package

Applications

- Precision timing
- Pulse generation
- Sequential timing
- Time delay generation
- Pulse width modulation
- Pulse position modulation
- Linear ramp generator

Schematic Diagram

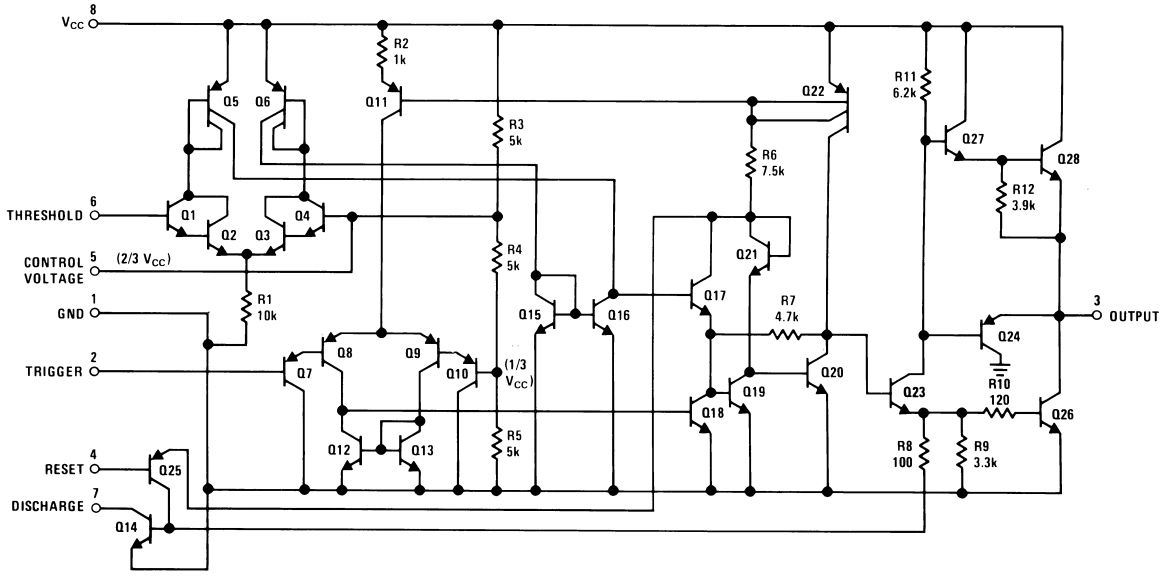

DS007851-1

© 2000 National Semiconductor Corporation

Connection Diagram

Dual-In-Line, Small Outline
and Molded Mini Small Outline Packages

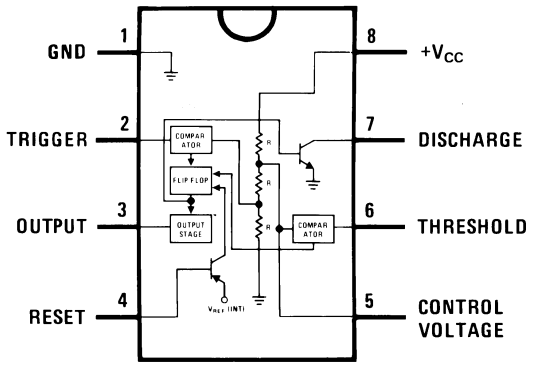

DS007851-3

Top View

Ordering Information

Package	Part Number	Package Marking	Media Transport	NSC Drawing
8-Pin SOIC	LM555CM	LM555CM	Rails	M08A
	LM555CMX	LM555CM	2.5k Units Tape and Reel	
8-Pin MSOP	LM555CMM	Z55	1k Units Tape and Reel	MUA08A
	LM555CMMX	Z55	3.5k Units Tape and Reel	
8-Pin MDIP	LM555CN	LM555CN	Rails	N08E

Absolute Maximum Ratings (Note 2)

If Military/Aerospace specified devices are required, please contact the National Semiconductor Sales Office/ Distributors for availability and specifications.

Supply Voltage	+18V
Power Dissipation (Note 3)	
LM555CM, LM555CN	1180 mW
LM555CMM	613 mW
Operating Temperature Ranges	
LM555C	0˚C to +70˚C
Storage Temperature Range	−65˚C to +150˚C

Soldering Information

Dual-In-Line Package	
Soldering (10 Seconds)	260˚C
Small Outline Packages	
(SOIC and MSOP)	
Vapor Phase (60 Seconds)	215˚C
Infrared (15 Seconds)	220˚C

See AN-450 “Surface Mounting Methods and Their Effect on Product Reliability” for other methods of soldering surface mount devices.

Electrical Characteristics (Notes 1, 2)

(T_A = 25˚C, V_{CC} = +5V to +15V, unless othewise specified)

Parameter	Conditions	Limits			Units
		LM555C			
		Min	Typ	Max	
Supply Voltage		4.5		16	V
Supply Current	V_{CC} = 5V, R_L = ∞		3	6	
	V_{CC} = 15V, R_L = ∞ (Low State) (Note 4)		10	15	mA
Timing Error, Monostable					
Initial Accuracy			1		%
Drift with Temperature	R_A = 1k to 100kΩ, C = 0.1µF, (Note 5)		50		ppm/˚C
Accuracy over Temperature			1.5		%
Drift with Supply			0.1		%/V
Timing Error, Astable					
Initial Accuracy			2.25		%
Drift with Temperature	R_A, R_B = 1k to 100kΩ, C = 0.1µF, (Note 5)		150		ppm/˚C
Accuracy over Temperature			3.0		%
Drift with Supply			0.30		%/V
Threshold Voltage			0.667		x V_{CC}
Trigger Voltage	V_{CC} = 15V		5		V
	V_{CC} = 5V		1.67		V
Trigger Current			0.5	0.9	µA
Reset Voltage		0.4	0.5	1	V
Reset Current			0.1	0.4	mA
Threshold Current	(Note 6)		0.1	0.25	µA
Control Voltage Level	V_{CC} = 15V	9	10	11	V
	V_{CC} = 5V	2.6	3.33	4	
Pin 7 Leakage Output High			1	100	nA
Pin 7 Sat (Note 7)					
Output Low	V_{CC} = 15V, I_7 = 15mA		180		mV
Output Low	V_{CC} = 4.5V, I_7 = 4.5mA		80	200	mV

Electrical Characteristics (Notes 1, 2) (Continued)

(T_A = 25˚C, V_{CC} = +5V to +15V, unless othewise specified)

Parameter	Conditions	Limits			Units
		LM555C			
		Min	Typ	Max	
Output Voltage Drop (Low)	V_{CC} = 15V				
	I_{SINK} = 10mA		0.1	0.25	V
	I_{SINK} = 50mA		0.4	0.75	V
	I_{SINK} = 100mA		2	2.5	V
	I_{SINK} = 200mA		2.5		V
	V_{CC} = 5V				
	I_{SINK} = 8mA				V
	I_{SINK} = 5mA		0.25	0.35	V
Output Voltage Drop (High)	I_{SOURCE} = 200mA, V_{CC} = 15V		12.5		V
	I_{SOURCE} = 100mA, V_{CC} = 15V	12.75	13.3		V
	V_{CC} = 5V	2.75	3.3		V
Rise Time of Output			100		ns
Fall Time of Output			100		ns

Note 1: All voltages are measured with respect to the ground pin, unless otherwise specified.

Note 2: Absolute Maximum Ratings indicate limits beyond which damage to the device may occur. Operating Ratings indicate conditions for which the device is functional, but do not guarantee specific performance limits. Electrical Characteristics state DC and AC electrical specifications under particular test conditions which guarantee specific performance limits. This assumes that the device is within the Operating Ratings. Specifications are not guaranteed for parameters where no limit is given, however, the typical value is a good indication of device performance.

Note 3: For operating at elevated temperatures the device must be derated above 25˚C based on a +150˚C maximum junction temperature and a thermal resistance of 106˚C/W (DIP), 170˚C/W (S0-8), and 204˚C/W (MSOP) junction to ambient.

Note 4: Supply current when output high typically 1 mA less at V_{CC} = 5V.

Note 5: Tested at V_{CC} = 5V and V_{CC} = 15V.

Note 6: This will determine the maximum value of $R_A + R_B$ for 15V operation. The maximum total ($R_A + R_B$) is 20MΩ.

Note 7: No protection against excessive pin 7 current is necessary providing the package dissipation rating will not be exceeded.

Note 8: Refer to RETS555X drawing of military LM555H and LM555J versions for specifications.

Typical Performance Characteristics

Minimuim Pulse Width Required for Triggering

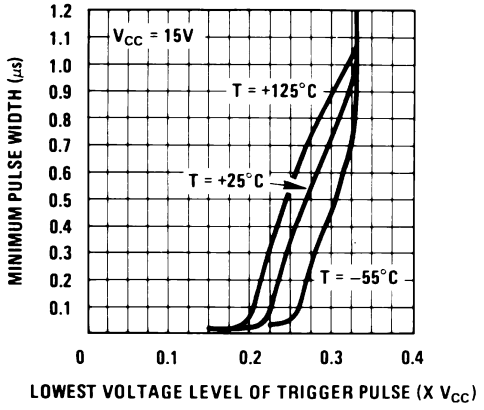

DS007851-4

Supply Current vs. Supply Voltage

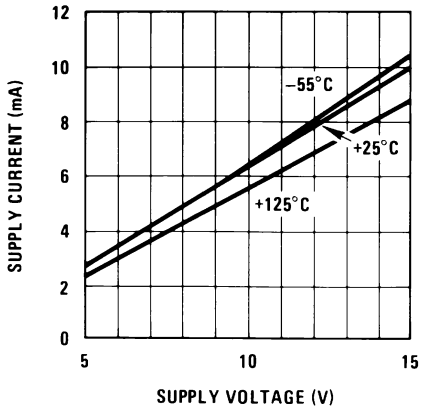

DS007851-19

High Output Voltage vs. Output Source Current

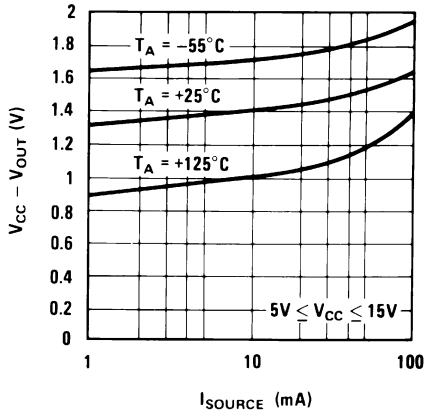

DS007851-20

Low Output Voltage vs. Output Sink Current

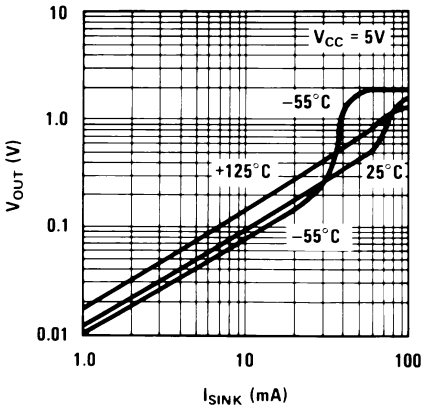

DS007851-21

Low Output Voltage vs. Output Sink Current

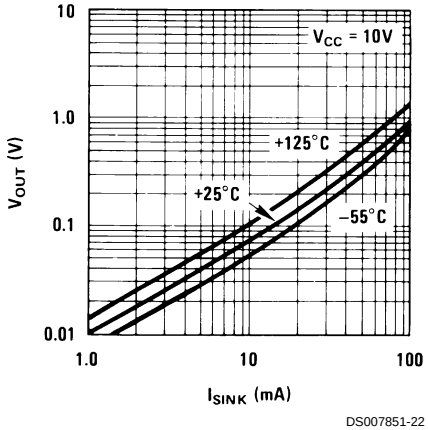

DS007851-22

Low Output Voltage vs. Output Sink Current

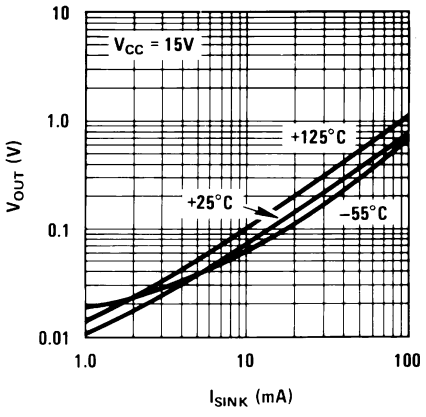

DS007851-23

Typical Performance Characteristics (Continued)

**Output Propagation Delay vs.
Voltage Level of Trigger Pulse**

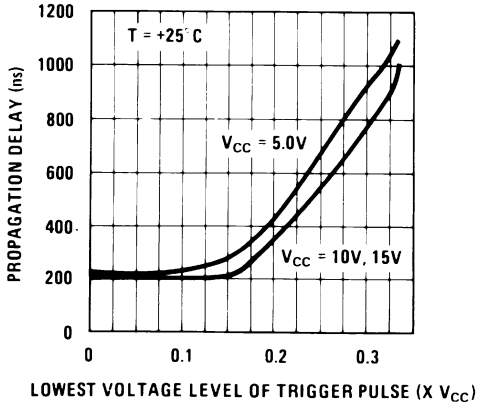

DS007851-24

**Output Propagation Delay vs.
Voltage Level of Trigger Pulse**

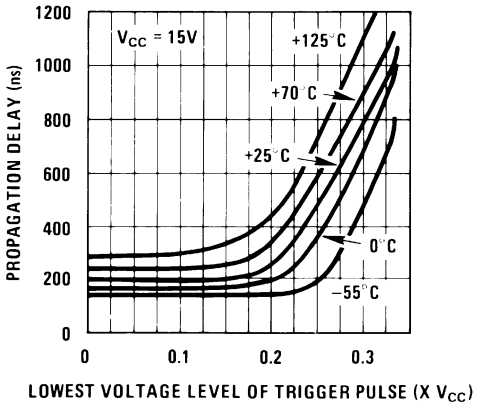

DS007851-25

**Discharge Transistor (Pin 7)
Voltage vs. Sink Current**

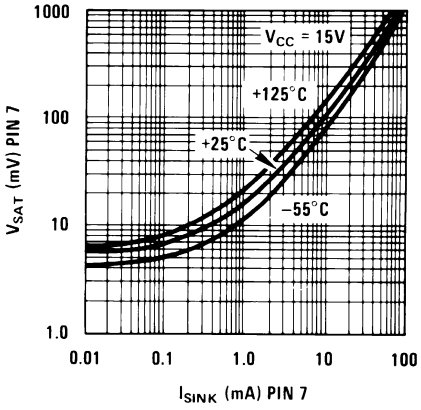

DS007851-26

**Discharge Transistor (Pin 7)
Voltage vs. Sink Current**

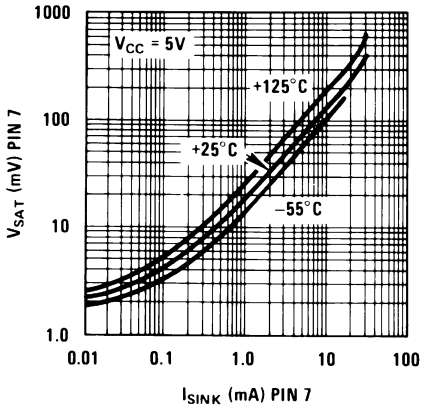

DS007851-27

Applications Information

MONOSTABLE OPERATION

In this mode of operation, the timer functions as a one-shot (*Figure 1*). The external capacitor is initially held discharged by a transistor inside the timer. Upon application of a negative trigger pulse of less than 1/3 V_{CC} to pin 2, the flip-flop is set which both releases the short circuit across the capacitor and drives the output high.

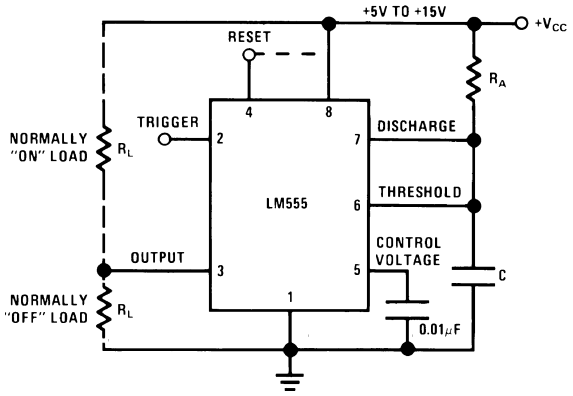

FIGURE 1. Monostable

The voltage across the capacitor then increases exponentially for a period of t = 1.1 R_A C, at the end of which time the voltage equals 2/3 V_{CC}. The comparator then resets the flip-flop which in turn discharges the capacitor and drives the output to its low state. *Figure 2* shows the waveforms generated in this mode of operation. Since the charge and the threshold level of the comparator are both directly proportional to supply voltage, the timing internal is independent of supply.

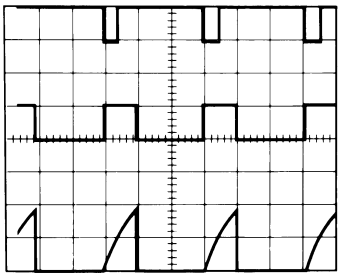

V_{CC} = 5V — Top Trace: Input 5V/Div.
TIME = 0.1 ms/DIV. — Middle Trace: Output 5V/Div.
R_A = 9.1kΩ — Bottom Trace: Capacitor Voltage 2V/Div.
C = 0.01μF

FIGURE 2. Monostable Waveforms

During the timing cycle when the output is high, the further application of a trigger pulse will not effect the circuit so long as the trigger input is returned high at least 10μs before the end of the timing interval. However the circuit can be reset during this time by the application of a negative pulse to the reset terminal (pin 4). The output will then remain in the low state until a trigger pulse is again applied.

When the reset function is not in use, it is recommended that it be connected to V_{CC} to avoid any possibility of false triggering.

Figure 3 is a nomograph for easy determination of R, C values for various time delays.

NOTE: In monostable operation, the trigger should be driven high before the end of timing cycle.

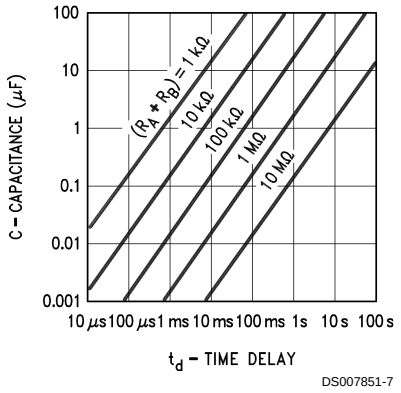

FIGURE 3. Time Delay

ASTABLE OPERATION

If the circuit is connected as shown in *Figure 4* (pins 2 and 6 connected) it will trigger itself and free run as a multivibrator. The external capacitor charges through R_A + R_B and discharges through R_B. Thus the duty cycle may be precisely set by the ratio of these two resistors.

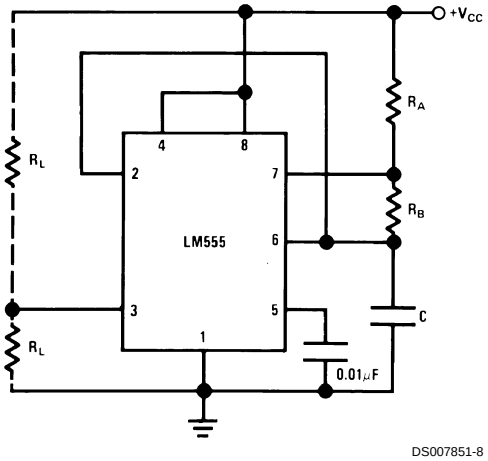

FIGURE 4. Astable

In this mode of operation, the capacitor charges and discharges between 1/3 V_{CC} and 2/3 V_{CC}. As in the triggered mode, the charge and discharge times, and therefore the frequency are independent of the supply voltage.

Applications Information (Continued)

Figure 5 shows the waveforms generated in this mode of operation.

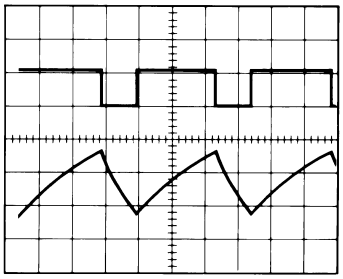

DS007851-9

V_{CC} = 5V Top Trace: Output 5V/Div.
TIME = 20µs/DIV. Bottom Trace: Capacitor Voltage 1V/Div.
R_A = 3.9kΩ
R_B = 3kΩ
C = 0.01µF

FIGURE 5. Astable Waveforms

The charge time (output high) is given by:

$$t_1 = 0.693\ (R_A + R_B)\ C$$

And the discharge time (output low) by:

$$t_2 = 0.693\ (R_B)\ C$$

Thus the total period is:

$$T = t_1 + t_2 = 0.693\ (R_A + 2R_B)\ C$$

The frequency of oscillation is:

$$f = \frac{1}{T} = \frac{1.44}{(R_A + 2R_B)\ C}$$

Figure 6 may be used for quick determination of these RC values.

The duty cycle is:

$$D = \frac{R_B}{R_A + 2R_B}$$

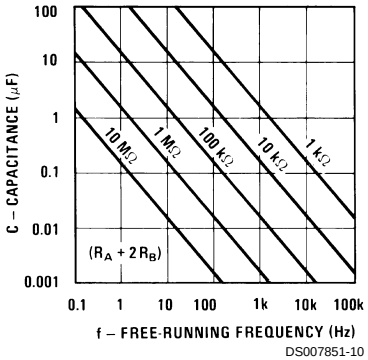

DS007851-10

FIGURE 6. Free Running Frequency

FREQUENCY DIVIDER

The monostable circuit of *Figure 1* can be used as a frequency divider by adjusting the length of the timing cycle. *Figure 7* shows the waveforms generated in a divide by three circuit.

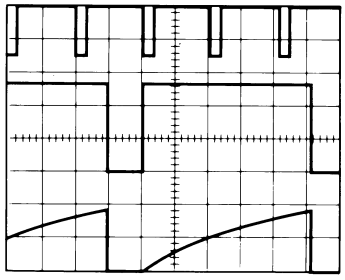

DS007851-11

V_{CC} = 5V Top Trace: Input 4V/Div.
TIME = 20µs/DIV. Middle Trace: Output 2V/Div.
R_A = 9.1kΩ Bottom Trace: Capacitor 2V/Div.
C = 0.01µF

FIGURE 7. Frequency Divider

PULSE WIDTH MODULATOR

When the timer is connected in the monostable mode and triggered with a continuous pulse train, the output pulse width can be modulated by a signal applied to pin 5. *Figure 8* shows the circuit, and in *Figure 9* are some waveform examples.

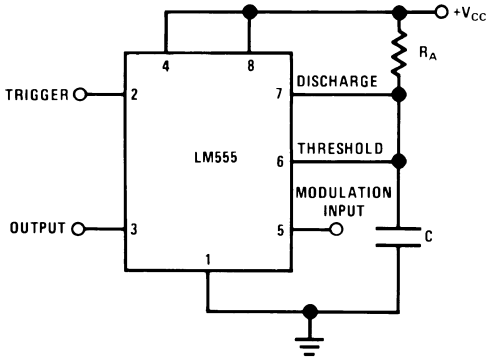

DS007851-12

FIGURE 8. Pulse Width Modulator

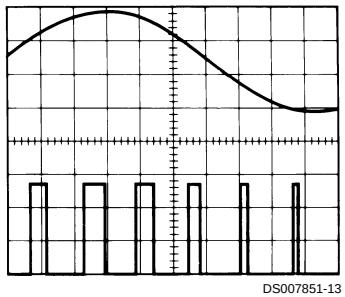

DS007851-13

V_{CC} = 5V Top Trace: Modulation 1V/Div.
TIME = 0.2 ms/DIV. Bottom Trace: Output Voltage 2V/Div.
R_A = 9.1kΩ
C = 0.01µF

FIGURE 9. Pulse Width Modulator

Applications Information (Continued)

PULSE POSITION MODULATOR

This application uses the timer connected for astable operation, as in *Figure 10*, with a modulating signal again applied to the control voltage terminal. The pulse position varies with the modulating signal, since the threshold voltage and hence the time delay is varied. *Figure 11* shows the waveforms generated for a triangle wave modulation signal.

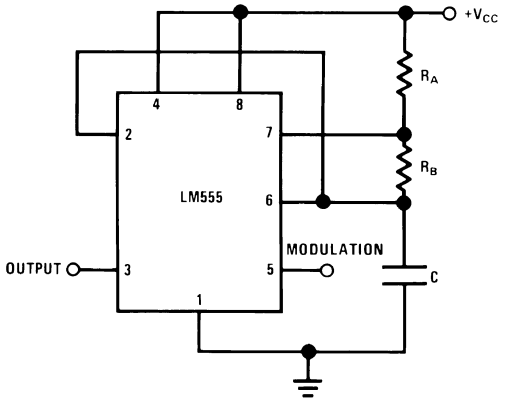

FIGURE 10. Pulse Position Modulator

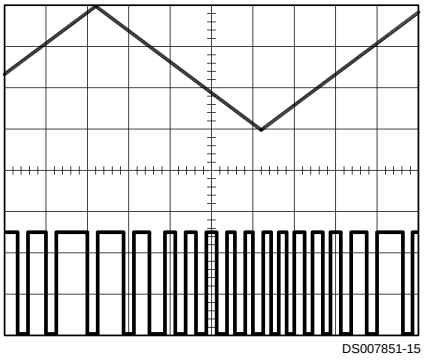

V_{CC} = 5V Top Trace: Modulation Input 1V/Div.
TIME = 0.1 ms/DIV. Bottom Trace: Output 2V/Div.
R_A = 3.9kΩ
R_B = 3kΩ
C = 0.01µF

FIGURE 11. Pulse Position Modulator

LINEAR RAMP

When the pullup resistor, R_A, in the monostable circuit is replaced by a constant current source, a linear ramp is generated. *Figure 12* shows a circuit configuration that will perform this function.

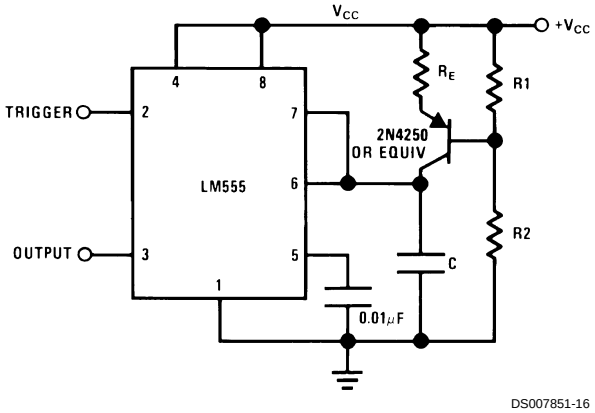

FIGURE 12.

Figure 13 shows waveforms generated by the linear ramp. The time interval is given by:

$$T = \frac{2/3\ V_{CC}\ R_E\ (R_1 + R_2)\ C}{R_1\ V_{CC} - V_{BE}\ (R_1 + R_2)}$$

$$V_{BE} \cong 0.6V$$

$$V_{BE} \simeq 0.6V$$

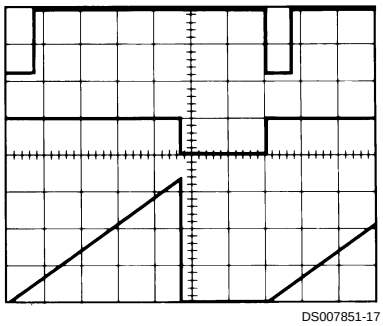

V_{CC} = 5V Top Trace: Input 3V/Div.
TIME = 20µs/DIV. Middle Trace: Output 5V/Div.
R_1 = 47kΩ Bottom Trace: Capacitor Voltage 1V/Div.
R_2 = 100kΩ
R_E = 2.7 kΩ
C = 0.01 µF

FIGURE 13. Linear Ramp

Applications Information (Continued)

50% DUTY CYCLE OSCILLATOR

For a 50% duty cycle, the resistors R_A and R_B may be connected as in *Figure 14*. The time period for the output high is the same as previous, $t_1 = 0.693\ R_A\ C$. For the output low it is $t_2 =$

$$\left[(R_A\ R_B)/(R_A + R_B)\right]\ C\ \ell n\left[\frac{R_B - 2R_A}{2R_B - R_A}\right]$$

Thus the frequency of oscillation is

$$f = \frac{1}{t_1 + t_2}$$

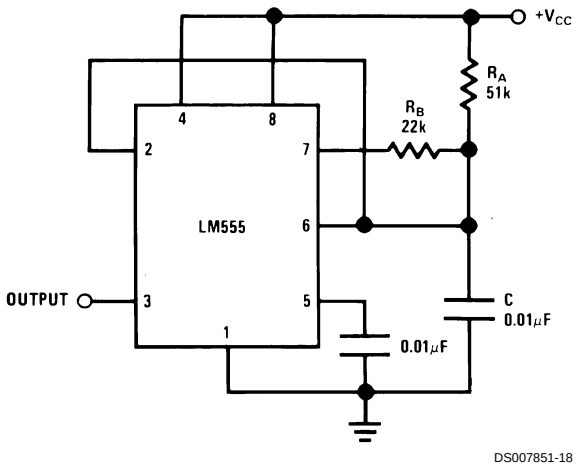

FIGURE 14. 50% Duty Cycle Oscillator

Note that this circuit will not oscillate if R_B is greater than 1/2 R_A because the junction of R_A and R_B cannot bring pin 2 down to 1/3 V_{CC} and trigger the lower comparator.

ADDITIONAL INFORMATION

Adequate power supply bypassing is necessary to protect associated circuitry. Minimum recommended is 0.1µF in parallel with 1µF electrolytic.

Lower comparator storage time can be as long as 10µs when pin 2 is driven fully to ground for triggering. This limits the monostable pulse width to 10µs minimum.

Delay time reset to output is 0.47µs typical. Minimum reset pulse width must be 0.3µs, typical.

Pin 7 current switches within 30ns of the output (pin 3) voltage.

Physical Dimensions inches (millimeters) unless otherwise noted

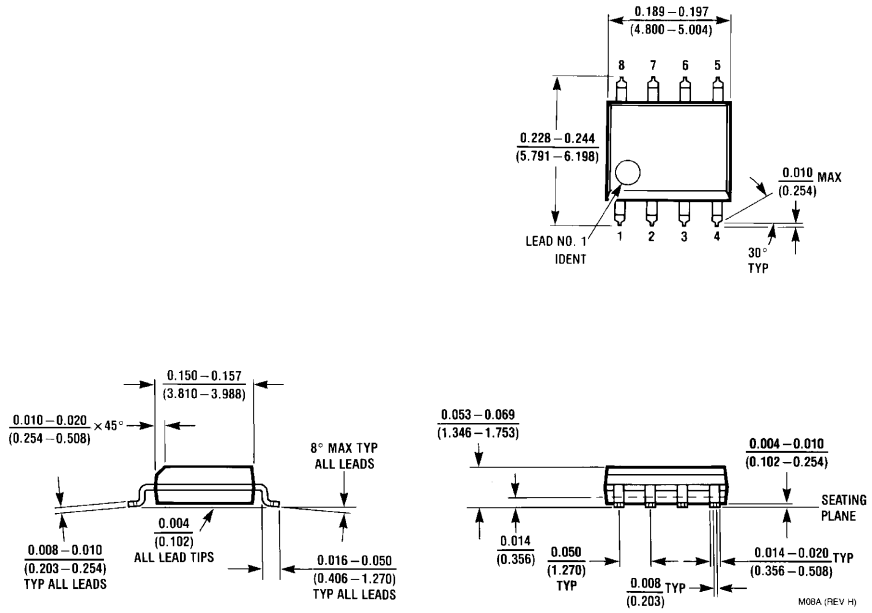

Small Outline Package (M)
NS Package Number M08A

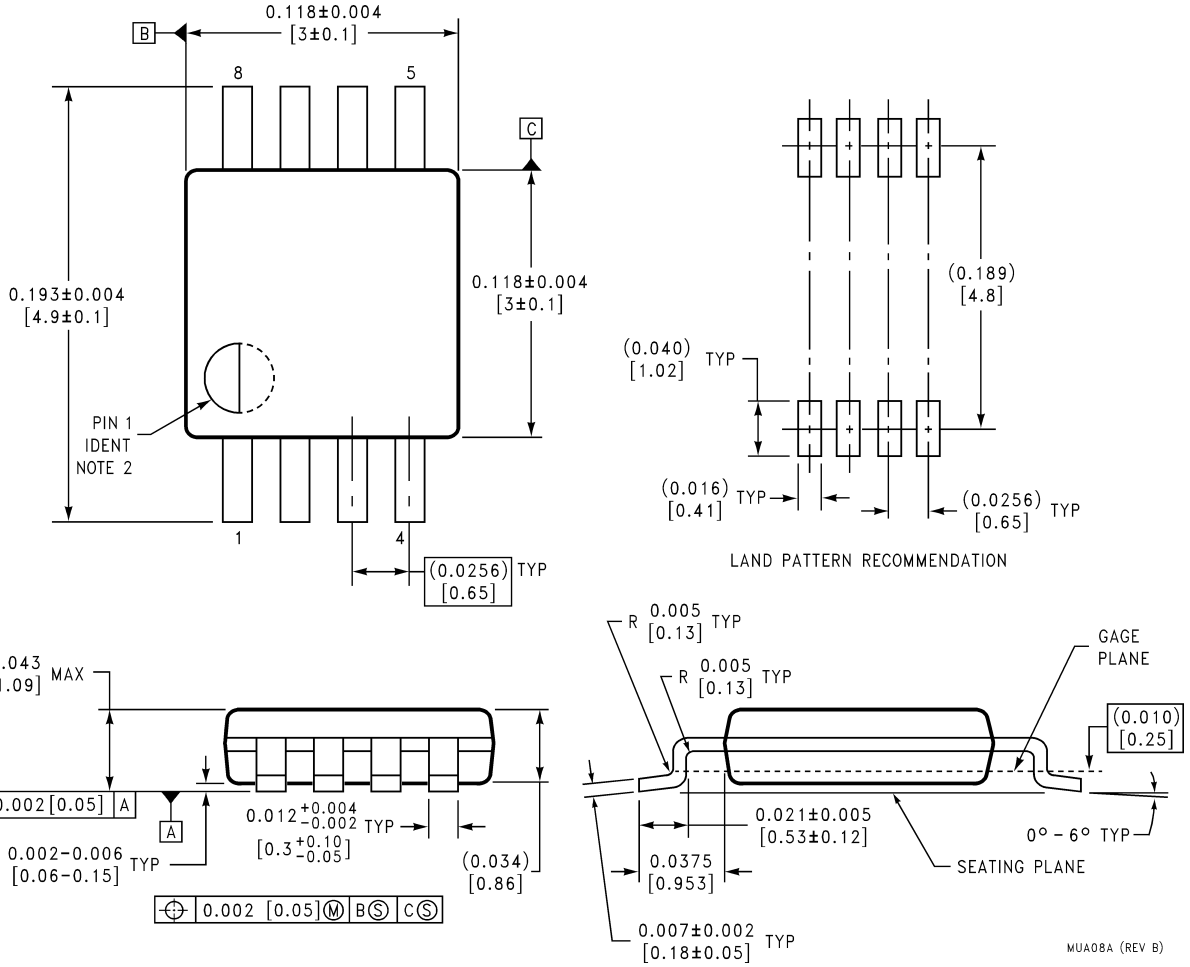

8-Lead (0.118” Wide) Molded Mini Small Outline Package
NS Package Number MUA08A

Physical Dimensions inches (millimeters) unless otherwise noted (Continued)

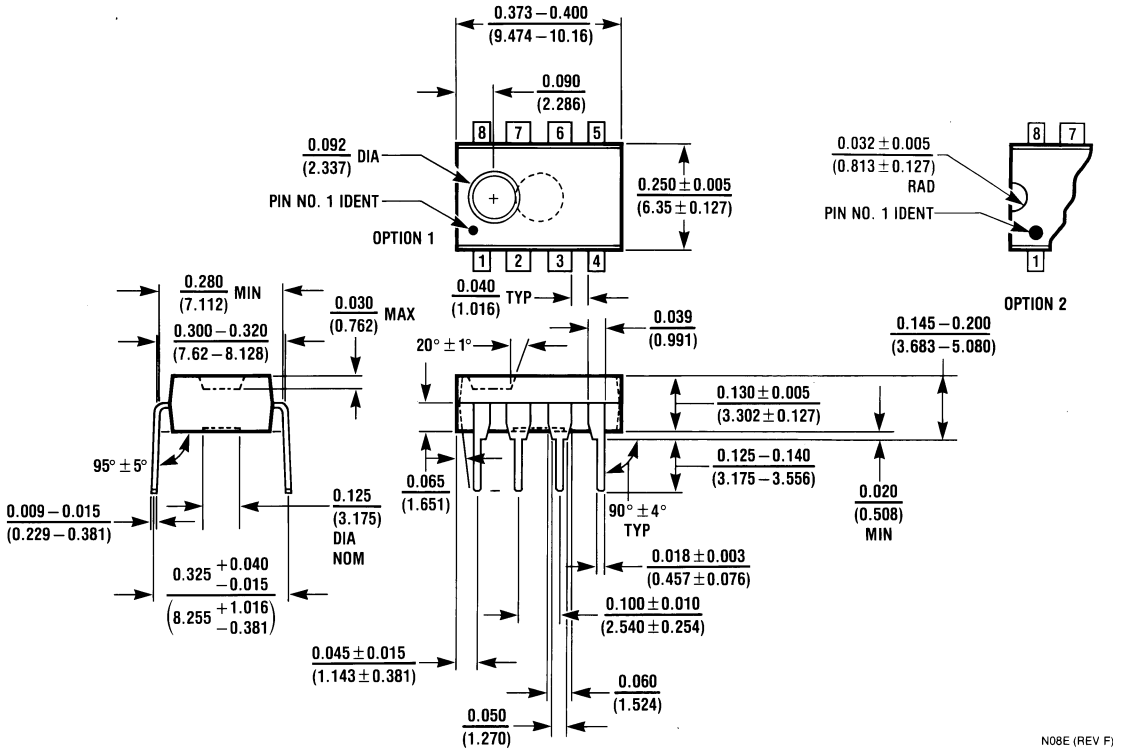

Molded Dual-In-Line Package (N)
NS Package Number N08E

LIFE SUPPORT POLICY

NATIONAL'S PRODUCTS ARE NOT AUTHORIZED FOR USE AS CRITICAL COMPONENTS IN LIFE SUPPORT DEVICES OR SYSTEMS WITHOUT THE EXPRESS WRITTEN APPROVAL OF THE PRESIDENT AND GENERAL COUNSEL OF NATIONAL SEMICONDUCTOR CORPORATION. As used herein:

1. Life support devices or systems are devices or systems which, (a) are intended for surgical implant into the body, or (b) support or sustain life, and whose failure to perform when properly used in accordance with instructions for use provided in the labeling, can be reasonably expected to result in a significant injury to the user.
2. A critical component is any component of a life support device or system whose failure to perform can be reasonably expected to cause the failure of the life support device or system, or to affect its safety or effectiveness.

National Semiconductor Corporation
Americas
Tel: 1-800-272-9959
Fax: 1-800-737-7018
Email: support@nsc.com
www.national.com

National Semiconductor Europe
Fax: +49 (0) 180-530 85 86
Email: europe.support@nsc.com
Deutsch Tel: +49 (0) 69 9508 6208
English Tel: +44 (0) 870 24 0 2171
Français Tel: +33 (0) 1 41 91 8790

National Semiconductor Asia Pacific Customer Response Group
Tel: 65-2544466
Fax: 65-2504466
Email: ap.support@nsc.com

National Semiconductor Japan Ltd.
Tel: 81-3-5639-7560
Fax: 81-3-5639-7507

National does not assume any responsibility for use of any circuitry described, no circuit patent licenses are implied and National reserves the right at any time without notice to change said circuitry and specifications.