SC16C652B

5 V, 3.3 V and 2.5 V dual UART, 5 Mbit/s (max.) with 32-byte FIFOs and infrared (IrDA) encoder/decoder

Rev. 04 — 1 September 2005 Product data sheet

1. General description

The SC16C652B is a 2 channel Universal Asynchronous Receiver and Transmitter (UART) used for serial data communications. Its principal function is to convert parallel data into serial data and vice versa. The UART can handle serial data rates up to 5 Mbit/s. The SC16C652B is pin compatible with the SC16C2550. It will power-up to be functionally equivalent to the 16C2450. The SC16C652B provides enhanced UART functions with 32-byte FIFOs, modem control interface, DMA mode data transfer, and IrDA encoder/decoder. The DMA mode data transfer is controlled by the FIFO trigger levels and the $\overline{TXRDY}$ and $\overline{RXRDY}$ signals. On-board status registers provide the user with error indications and operational status. System interrupts and modem control features may be tailored by software to meet specific user requirements. An internal loop-back capability allows on-board diagnostics. Independent programmable baud rate generators are provided to select transmit and receive baud rates.

The SC16C652B operates at 5 V, 3.3 V and 2.5 V and the industrial temperature range, and is available in plastic LQFP48 and very small (Micro-UART) HVQFN32 packages.

2. Features

- 2 channel UART
- 5 V, 3.3 V and 2.5 V operation
- 5 V tolerant inputs
- Industrial temperature range (–40 °C to +85 °C)
- Pin and functionally compatible to 16C2450 in LQFP48 package, and software compatible with industry standard 16C450, 16C550, and SC16C650
- Up to 5 Mbit/s data rate at 5 V and 3.3 V, and 3 Mbit/s at 2.5 V
- 32-byte transmit FIFO to reduce the bandwidth requirement of the external CPU
- 32-byte receive FIFO with error flags to reduce the bandwidth requirement of the external CPU
- Independent transmit and receive UART control
- Four selectable Receive and Transmit FIFO interrupt trigger levels
- Automatic software (Xon/Xoff) and hardware ($\overline{RTS}$/$\overline{CTS}$) flow control
- Programmable Xon/Xoff characters
- Software selectable baud rate generator
- Standard modem interface or infrared IrDA encoder/decoder interface
- Supports IrDA version 1.0 (up to 115.2 kbit/s)
- Sleep mode
- Standard asynchronous error and framing bits (Start, Stop, and Parity Overrun Break)

PHILIPS

- Transmit, Receive, Line Status, and Data Set interrupts independently controlled
- Fully programmable character formatting:
  - 5-bit, 6-bit, 7-bit, or 8-bit characters
  - Even, odd, or no-parity formats
  - 1, 1½, or 2-stop bit
  - Baud generation (DC to 5 Mbit/s)
- False start-bit detection
- Complete status reporting capabilities
- 3-state output TTL drive capabilities for bi-directional data bus and control bus
- Line break generation and detection
- Internal diagnostic capabilities:
  - Loop-back controls for communications link fault isolation
- Prioritized interrupt system controls
- Modem control functions ($\overline{CTS}$, $\overline{RTS}$, $\overline{DSR}$, $\overline{DTR}$, $\overline{RI}$, $\overline{CD}$)

3. Ordering information

Table 1: Ordering information

Type number	Package		
	Name	Description	Version
SC16C652BIB48	LQFP48	plastic low profile quad flat package; 48 leads; body 7 × 7 × 1.4 mm	SOT313-2
SC16C652BIBS	HVQFN32	plastic thermal enhanced very thin quad flat package; no leads; 32 terminals; body 5 × 5 × 0.85 mm	SOT617-1

© Koninklijke Philips Electronics N.V. 2005. All rights reserved.

4. Block diagram

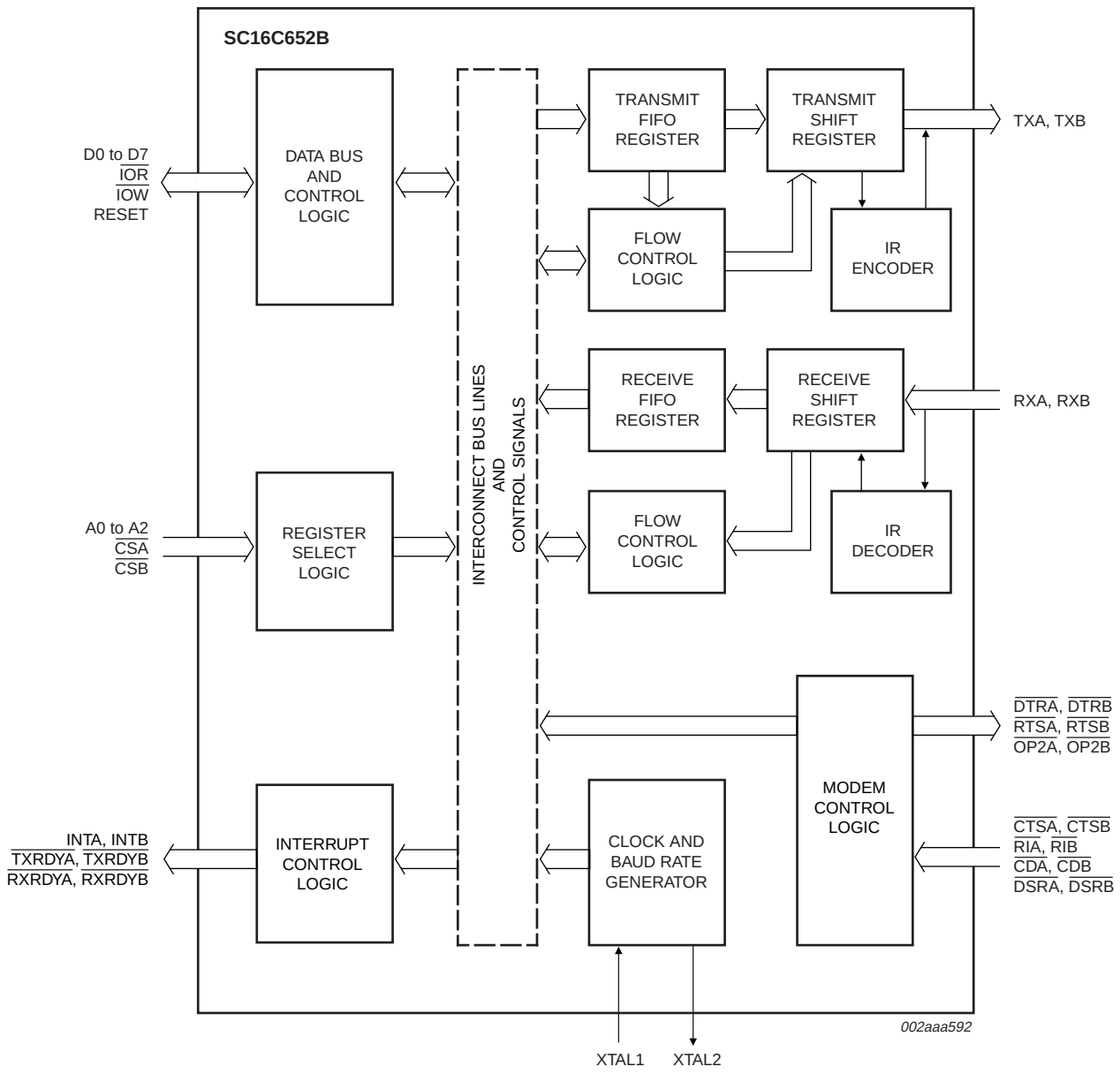

Fig 1. Block diagram of SC16C652B

© Koninklijke Philips Electronics N.V. 2005. All rights reserved.

5. Pinning information

5.1 Pinning

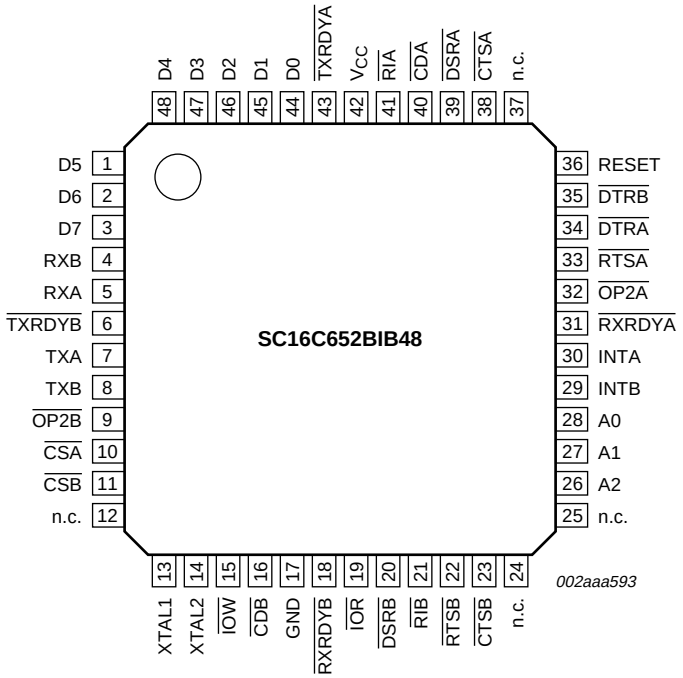

Fig 2. Pin configuration for LQFP48

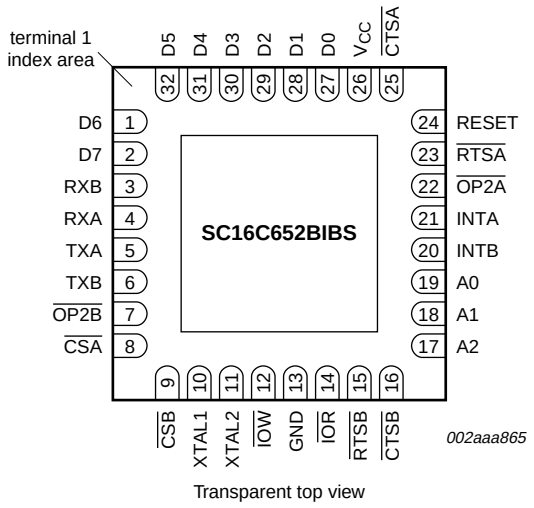

Fig 3. Pin configuration for HVQFN32

© Koninklijke Philips Electronics N.V. 2005. All rights reserved.

5.2 Pin description

Table 2: Pin description

Symbol	Pin		Type	Description
	LQFP48	HVQFN32		
A0	28	19	I	**Address 0 select bit.** Internal register address selection.
A1	27	18	I	**Address 1 select bit.** Internal register address selection.
A2	26	17	I	**Address 2 select bit.** Internal register address selection.
$\overline{CDA}$	40	-	I	**Carrier Detect (active LOW).** These inputs are associated with individual UART channels A through B. A logic 0 on this pin indicates that a carrier has been detected by the modem for that channel.
$\overline{CDB}$	16	-		
$\overline{CSA}$	10	8	I	**Chip Select A, B (active LOW).** This function is associated with individual channels, A through B. These pins enable data transfers between the user CPU and the SC16C652B for the channel(s) addressed. Individual UART sections (A, B) are addressed by providing a logic 0 on the respective $\overline{CSA}$, $\overline{CSB}$ pin.
$\overline{CSB}$	11	9		
$\overline{CTSA}$	38	25	I	**Clear to Send (active LOW).** These inputs are associated with individual UART channels, A through B. A logic 0 on the $\overline{CTS}$ pin indicates the modem or data set is ready to accept transmit data from the SC16C652B. Status can be tested by reading MSR[4]. This pin has no effect on the UART's transmit or receive operation.
$\overline{CTSB}$	23	16		
$\overline{DSRA}$	39	-	I	**Data Set Ready (active LOW).** These inputs are associated with individual UART channels, A through B. A logic 0 on this pin indicates the modem or data set is powered-on and is ready for data exchange with the UART. This pin has no effect on the UART's transmit or receive operation.
$\overline{DSRB}$	20	-		
$\overline{DTRA}$	34	-	O	**Data Terminal Ready (active LOW).** These outputs are associated with individual UART channels, A through B. A logic 0 on this pin indicates that the SC16C652B is powered-on and ready. This pin can be controlled via the modem control register. Writing a logic 1 to MCR[0] will set the $\overline{DTR}$ output to logic 0, enabling the modem. This pin will be a logic 1 after writing a logic 0 to MCR[0], or after a reset. This pin has no effect on the UART's transmit or receive operation.
$\overline{DTRB}$	35	-		
D0	44	27	I/O	**Data bus (bi-directional).** These pins are the 8-bit, 3-state data bus for transferring information to or from the controlling CPU. D0 is the least significant bit and the first data bit in a transmit or receive serial data stream.
D1	45	28		
D2	46	29		
D3	47	30		
D4	48	31		
D5	1	32		
D6	2	1		
D7	3	2		
GND	17	13	I	**Signal and power ground.**
INTA	30	21	O	**Interrupt A, B (3-state).** This function is associated with individual channel interrupts, INTA, INTB. INTA, INTB are enabled when MCR bit 3 is set to a logic 1, interrupts are enabled in the Interrupt Enable Register (IER), and is active when an interrupt condition exists. Interrupt conditions include: receiver errors, available receiver buffer data, transmit buffer empty, or when a modem status flag is detected.
INTB	29	20		
$\overline{IOR}$	19	14	I	**Read strobe (active LOW strobe).** A logic 0 transition on this pin will load the contents of an internal register defined by address bits A0 to A2 onto the SC16C652B data bus (D0 to D7) for access by external CPU.

© Koninklijke Philips Electronics N.V. 2005. All rights reserved.

Table 2: Pin description *...continued*

Symbol	Pin		Type	Description
	LQFP48	HVQFN32		
$\overline{IOW}$	15	12	I	**Write strobe (active LOW strobe).** A logic 0 transition on this pin will transfer the contents of the data bus (D0 to D7) from the external CPU to an internal register that is defined by address bits A0 to A2.
$\overline{OP2A}$	32	22	O	**Output 2 (user-defined).** This function is associated with individual channels, A through B. The state at these pin(s) are defined by the user and through MCR register bit 3. INTA, INTB are set to the active mode and $\overline{OP2}$ to logic 0 when MCR[3] is set to a logic 1. INTA, INTB are set to the 3-state mode and $\overline{OP2}$ to a logic 1 when MCR[3] is set to a logic 0 (see Table 20 "Modem Control Register bits description", bit 3). Since these bits control both the INTA, INTB operation and $\overline{OP2}$ outputs, only one function should be used at one time, INT or $\overline{OP2}$.
$\overline{OP2B}$	9	7		
RESET	36	24	I	**Reset (active HIGH).** A logic 1 on this pin will reset the internal registers and all the outputs. The UART transmitter output and the receiver input will be disabled during reset time. (See Section 7.11 "SC16C652B external reset condition" for initialization details.)
$\overline{RIA}$	41	-	I	**Ring Indicator (active LOW).** These inputs are associated with individual UART channels, A through B. A logic 0 on this pin indicates the modem has received a ringing signal from the telephone line. A logic 1 transition on this input pin will generate an interrupt.
$\overline{RIB}$	21	-		
$\overline{RTSA}$	33	23	O	**Request to Send (active LOW).** These outputs are associated with individual UART channels, A through B. A logic 0 on the $\overline{RTS}$ pin indicates the transmitter has data ready and waiting to send. Writing a logic 1 in the modem control register MCR[1] will set this pin to a logic 0, indicating data is available. After a reset this pin will be set to a logic 1. This pin has no effect on the UART's transmit or receive operation.
$\overline{RTSB}$	22	15		
RXA	5	4	I	**Receive data A, B.** These inputs are associated with individual serial channel data to the SC16C652B receive input circuits, A through B. The RX signal will be a logic 1 during reset, idle (no data), or when the transmitter is disabled. During the local loop-back mode, the RX input pin is disabled and TX data is connected to the UART RX input, internally.
RXB	4	3		
$\overline{RXRDYA}$	31	-	O	**Receive Ready A, B (active LOW).** This function provides the RX FIFO/RHR status for individual receive channels (A to B). $\overline{RXRDY}$n is primarily intended for monitoring DMA mode 1 transfers for the receive data FIFOs. A logic 0 indicates there is a receive data to read/upload, that is, receive ready status with one or more RX characters available in the FIFO/RHR. This pin is a logic 1 when the FIFO/RHR is empty or when the programmed trigger level has not been reached. This signal can also be used for single mode transfers (DMA mode 0).
$\overline{RXRDYB}$	18	-		
TXA	7	5	O	**Transmit data A, B.** These outputs are associated with individual serial transmit channel data from the SC16C652B. The TX signal will be a logic 1 during reset, idle (no data), or when the transmitter is disabled. During the local loop-back mode, the TX output pin is disabled and TX data is internally connected to the UART RX input.
TXB	8	6		
$\overline{TXRDYA}$	43	-	O	**Transmit Ready A, B (active LOW).** These outputs provide the TX FIFO/THR status for individual transmit channels (A to B). $\overline{TXRDY}$n is primarily intended for monitoring DMA mode 1 transfers for the transmit data FIFOs. An individual channel's $\overline{TXRDYA}$, $\overline{TXRDYB}$ buffer ready status is indicated by logic 0, that is, at lease one location is empty and available in the FIFO or THR. This pin goes to a logic 1 (DMA mode 1) when there are no more empty locations in the FIFO or THR. This signal can also be used for single mode transfers (DMA mode 0).
$\overline{TXRDYB}$	6	-		

© Koninklijke Philips Electronics N.V. 2005. All rights reserved.

Table 2: Pin description *...continued*

Symbol	Pin		Type	Description
	LQFP48	HVQFN32		
V_{CC}	42	26	I	**Power supply input.**
XTAL1	13	10	I	**Crystal or external clock input.** Functions as a crystal input or as an external clock input. A crystal can be connected between this pin and XTAL2 to form an internal oscillator circuit. This configuration requires an external 1 MΩ resistor between the XTAL1 and XTAL2 pins. Alternatively, an external clock can be connected to this pin to provide custom data rates (see Section 6.8 "Programmable baud rate generator"). See Figure 4.
XTAL2	14	11	O	**Output of the crystal oscillator or buffered clock.** (See also XTAL1.) Crystal oscillator output or buffered clock output. Should be left open if an external clock is connected to XTAL1. For extended frequency operation, this pin should be tied to V_{CC} via a 2 kΩ resistor.

6. Functional description

The SC16C652B provides serial asynchronous receive data synchronization, parallel-to-serial and serial-to-parallel data conversions for both the transmitter and receiver sections. These functions are necessary for converting the serial data stream into parallel data that is required with digital data systems. Synchronization for the serial data stream is accomplished by adding start and stop bits to the transmit data to form a data character (character orientated protocol). Data integrity is insured by attaching a parity bit to the data character. The parity bit is checked by the receiver for any transmission bit errors. The electronic circuitry to provide all these functions is fairly complex, especially when manufactured on a single integrated silicon chip. The SC16C652B represents such an integration with greatly enhanced features. The SC16C652B is fabricated with an advanced CMOS process.

The SC16C652B is an upward solution that provides a dual UART capability with 32 bytes of transmit and receive FIFO memory, instead of 16 bytes for the 16C2550 and none in the 16C2450. The SC16C652B is designed to work with high speed modems and shared network environments that require fast data processing time. Increased performance is realized in the SC16C652B by the transmit and receive FIFOs. This allows the external processor to handle more networking tasks within a given time. In addition, the four selectable receive and transmit FIFO trigger interrupt levels are uniquely provided for maximum data throughput performance especially when operating in a multi-channel environment. The FIFO memory greatly reduces the bandwidth requirement of the external controlling CPU, increases performance, and reduces power consumption.

The SC16C652B is capable of operation up to 5 Mbit/s with a 80 MHz clock. With a crystal or external clock input of 7.3728 MHz, the user can select data rates up to 460.8 kbit/s.

The rich feature set of the SC16C652B is available through internal registers. Selectable receive and transmit FIFO trigger levels, selectable TX and RX baud rates, and modem interface controls are all standard features. Following a power-on reset or an external reset, the SC16C652B is software compatible with the previous generation, SC16C2550 and ST16C2450.

© Koninklijke Philips Electronics N.V. 2005. All rights reserved.

6.1 UART A-B functions

The UART provides the user with the capability to bi-directionally transfer information between an external CPU, the SC16C652B package, and an external serial device. A logic 0 on chip select pins $\overline{CSA}$ and/or $\overline{CSB}$ allows the user to configure, send data, and/or receive data via UART channels A-B. Individual channel select functions are shown in Table 3.

Table 3: Serial port selection

Chip Select	Function
$\overline{CSA}$-$\overline{CSB}$ = 1	none
$\overline{CSA}$ = 0	UART channel A
$\overline{CSB}$ = 0	UART channel B

6.2 Internal registers

The SC16C652B provides two sets of internal registers (A and B) consisting of 17 registers each for monitoring and controlling the functions of each channel of the UART. These registers are shown in Table 4. The UART registers function as data holding registers (THR/RHR), interrupt status and control registers (IER/ISR), a FIFO Control Register (FCR), line status and control registers (LCR/LSR), modem status and control registers (MCR/MSR), programmable data rate (clock) control registers (DLL/DLM), and a user accessible Scratchpad Register (SPR).

Table 4: Internal registers decoding

A2	A1	A0	Read mode	Write mode
General register set (THR/RHR, IER/ISR, MCR/MSR, FCR, LSR, SPR) [1]				
0	0	0	Receive Holding Register	Transmit Holding Register
0	0	1	Interrupt Enable Register	Interrupt Enable Register
0	1	0	Interrupt Status Register	FIFO Control Register
0	1	1	Line Control Register	Line Control Register
1	0	0	Modem Control Register	Modem Control Register
1	0	1	Line Status Register	n/a
1	1	0	Modem Status Register	n/a
1	1	1	Scratchpad Register	Scratchpad Register
Baud rate register set (DLL/DLM) [2]				
0	0	0	LSB of Divisor Latch	LSB of Divisor Latch
0	0	1	MSB of Divisor Latch	MSB of Divisor Latch
Enhanced register set (EFR, Xon1/Xon2, Xoff1/Xoff2) [3]				
0	1	0	Enhanced Feature Register	Enhanced Feature Register
1	0	0	Xon1 word	Xon1 word
1	0	1	Xon2 word	Xon2 word
1	1	0	Xoff1 word	Xoff1 word
1	1	1	Xoff2 word	Xoff2 word

[1] These registers are accessible only when LCR[7] is a logic 0.

[2] These registers are accessible only when LCR[7] is a logic 1.

[3] Enhanced Feature Register, Xon1/Xon2 and Xoff1/Xoff2 are accessible only when the LCR is set to ‘BFh’.

© Koninklijke Philips Electronics N.V. 2005. All rights reserved.

6.3 FIFO operation

The 32-byte transmit and receive data FIFOs are enabled by the FIFO Control Register bit 0 (FCR[0]). With 16C2550 devices, the user can set the receive trigger level, but not the transmit trigger level. The SC16C652B provides independent trigger levels for both receiver and transmitter. To remain compatible with SC16C2550, the transmit interrupt trigger level is set to 16 following a reset. It should be noted that the user can set the transmit trigger levels by writing to the FCR, but activation will not take place until EFR[4] is set to a logic 1. The receiver FIFO section includes a time-out function to ensure data is delivered to the external CPU. An interrupt is generated whenever the Receive Holding Register (RHR) has not been read following the loading of a character or the receive trigger level has not been reached.

Table 5: Flow control mechanism

Selected trigger level (characters)	INT pin activation		Negate $\overline{RTS}$ or send Xoff	Assert $\overline{RTS}$ or send Xon
	RX	TX		
8	8	16	8	0
16	16	8	16	7
24	24	24	24	15
28	28	30	28	23

6.4 Hardware flow control

When automatic hardware flow control is enabled, the SC16C652B monitors the $\overline{CTS}$ pin for a remote buffer overflow indication and controls the $\overline{RTS}$ pin for local buffer overflows. Automatic hardware flow control is selected by setting EFR[6] (RTS) and EFR[7] (CTS) to a logic 1. If $\overline{CTS}$ transitions from a logic 0 to a logic 1 indicating a flow control request, ISR[5] will be set to a logic 1 (if enabled via IER[7:6]), and the SC16C652B will suspend TX transmissions as soon as the stop bit of the character in process is shifted out. Transmission is resumed after the $\overline{CTS}$ input returns to a logic 0, indicating more data may be sent.

With the Auto-RTS function enabled, an interrupt is generated when the receive FIFO reaches the programmed trigger level. The $\overline{RTS}$ pin will not be forced to a logic 1 (RTS off), until the receive FIFO reaches the next trigger level. However, the $\overline{RTS}$ pin will return to a logic 0 after the data buffer (FIFO) is unloaded to the next trigger level below the programmed trigger level. However, under the above described conditions, the SC16C652B will continue to accept data until the receive FIFO is full.

6.5 Software flow control

When software flow control is enabled, the SC16C652B compares one or two sequential receive data characters with the programmed Xon or Xoff character value(s). If received character(s) match the programmed Xoff values, the SC16C652B will halt transmission (TX) as soon as the current character(s) has completed transmission. When a match occurs, the receive ready (if enabled via Xoff IER[5]) flags will be set and the interrupt output pin (if receive interrupt is enabled) will be activated. Following a suspension due to a match of the Xoff characters' values, the SC16C652B will monitor the receive data stream for a match to the Xon1/Xon2 character value(s). If a match is found, the SC16C652B will resume operation and clear the flags (ISR[4]).

© Koninklijke Philips Electronics N.V. 2005. All rights reserved.

Reset initially sets the contents of the Xon/Xoff 8-bit flow control registers to a logic 0. Following reset, the user can write any Xon/Xoff value desired for software flow control. Different conditions can be set to detect Xon/Xoff characters and suspend/resume transmissions. When double 8-bit Xon/Xoff characters are selected, the SC16C652B compares two consecutive receive characters with two software flow control 8-bit values (Xon1, Xon2, Xoff1, Xoff2) and controls TX transmissions accordingly. Under the above described flow control mechanisms, flow control characters are not placed (stacked) in the user accessible RX data buffer or FIFO. When using a software flow control the Xon/Xoff characters cannot be used for data transfer.

In the event that the receive buffer is overfilling and flow control needs to be executed, the SC16C652B automatically sends an Xoff message (when enabled) via the serial TX output to the remote modem. The SC16C652B sends the Xoff1/Xoff2 characters as soon as received data passes the programmed trigger level. To clear this condition, the SC16C652B will transmit the programmed Xon1/Xon2 characters as soon as receive data drops below the programmed trigger level.

6.6 Special feature software flow control

A special feature is provided to detect an 8-bit character when EFR[5] is set. When 8-bit character is detected, it will be placed on the user-accessible data stack along with normal incoming RX data. This condition is selected in conjunction with EFR[3:0]. Note that software flow control should be turned off when using this special mode by setting EFR[3:0] to a logic 0.

The SC16C652B compares each incoming receive character with Xoff2 data. If a match exists, the received data will be transferred to the FIFO, and ISR[4] will be set to indicate detection of a special character. Although Table 9 “SC16C652B internal registers” shows each X-Register with eight bits of character information, the actual number of bits is dependent on the programmed word length. Line Control Register bits LCR[1:0] define the number of character bits, that is, either 5 bits, 6 bits, 7 bits or 8 bits. The word length selected by LCR[1:0] also determine the number of bits that will be used for the special character comparison. Bit 0 in the X-registers corresponds with the LSB bit for the receive character.

6.7 Hardware/software and time-out interrupts

The interrupts are enabled by IER[3:0]. Care must be taken when handling these interrupts. Following a reset, if Interrupt Enable Register (IER) bit 1 = 1, the SC16C652B will issue a Transmit Holding Register interrupt. This interrupt must be serviced prior to continuing operations. The ISR provides the current singular highest priority interrupt only. It could be noted that CTS and RTS interrupts have lowest interrupt priority. A condition can exist where a higher priority interrupt may mask the lower priority CTS/RTS interrupt(s). Only after servicing the higher pending interrupt will the lower priority CTS/RTS interrupt(s) be reflected in the status register. Servicing the interrupt without investigating further interrupt conditions can result in data errors.

When two interrupt conditions have the same priority, it is important to service these interrupts correctly. Receive Data Ready and Receive Time Out have the same interrupt priority (when enabled by IER[0]). The receiver issues an interrupt after the number of characters have reached the programmed trigger level. In this case, the SC16C652B FIFO may hold more characters than the programmed trigger level. Following the removal of a data byte, the user should re-check LSR[0] for additional characters. A Receive

© Koninklijke Philips Electronics N.V. 2005. All rights reserved.

Time Out will not occur if the receive FIFO is empty. The time-out counter is reset at the center of each stop bit received or each time the Receive Holding Register (RHR) is read. The actual time-out value is 4 character time, including data information length, start bit, parity bit, and the size of stop bit, that is, 1×, 1.5×, or 2× bit times.

6.8 Programmable baud rate generator

The SC16C652B supports high speed modem technologies that have increased input data rates by employing data compression schemes. For example, a 33.6 kbit/s modem that employs data compression may require a 115.2 kbit/s input data rate. A 128.0 kbit/s ISDN modem that supports data compression may need an input data rate of 460.8 kbit/s. The SC16C652B can support a standard data rate of 921.6 kbit/s.

A single baud rate generator is provided for the transmitter and receiver, allowing independent TX/RX channel control. The programmable Baud Rate Generator is capable of operating with a frequency of up to 80 MHz. To obtain maximum data rate, it is necessary to use full rail swing on the clock input. The SC16C652B can be configured for internal or external clock operation. For internal clock oscillator operation, an industry standard microprocessor crystal is connected externally between the XTAL1 and XTAL2 pins. Alternatively, an external clock can be connected to the XTAL1 pin to clock the internal baud rate generator for standard or custom rates (see Table 6).

The generator divides the input 16× clock by any divisor from 1 to (2^{16} – 1). The SC16C652B divides the basic external clock by 16. The basic 16× clock provides table rates to support standard and custom applications using the same system design. The rate table is configured via the DLL and DLM internal register functions. Customized baud rates can be achieved by selecting the proper divisor values for the MSB and LSB sections of baud rate generator.

Programming the baud rate generator registers DLM (MSB) and DLL (LSB) provides a user capability for selecting the desired final baud rate. The example in Table 6 shows the selectable baud rate table available when using a 1.8432 MHz external clock input.

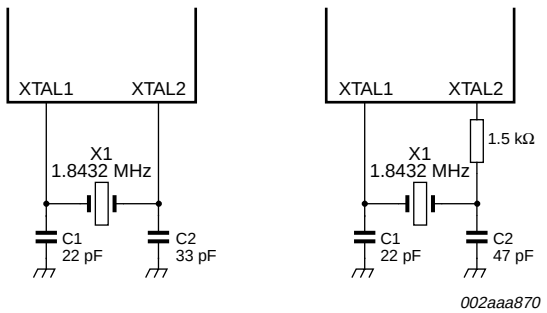

Fig 4. Crystal oscillator connection

© Koninklijke Philips Electronics N.V. 2005. All rights reserved.

Table 6: Baud rate generator programming table using a 1.8432 MHz clock

Output baud rate (bit/s)	Output 16× clock divisor (decimal)	Output 16× clock divisor (HEX)	DLM program value (HEX)	DLL program value (HEX)
50	2304	900	09	00
75	1536	600	06	00
110	1047	417	04	17
150	768	300	03	00
300	384	180	01	80
600	192	C0	00	C0
1200	96	60	00	60
2400	48	30	00	30
3600	32	20	00	20
4800	24	18	00	18
7200	16	10	00	10
9600	12	0C	00	0C
19.2 k	6	06	00	06
38.4 k	3	03	00	03
57.6 k	2	02	00	02
115.2 k	1	01	00	01

6.9 DMA operation

The SC16C652B FIFO trigger level provides additional flexibility to the user for block mode operation. The user can optionally operate the transmit and receive FIFOs in the DMA mode (FCR[3]). The DMA mode affects the state of the $\overline{RXRDY}$ and $\overline{TXRDY}$ output pins. Table 7 and Table 8 show this.

Table 7: Effect of DMA mode on state of $\overline{RXRDY}$ pin

Non-DMA mode	DMA mode
1 = FIFO empty	0-to-1 transition when FIFO empties
0 = at least 1 byte in FIFO	1-to-0 transition when FIFO reaches trigger level, or time-out occurs

Table 8: Effect of DMA mode on state of $\overline{TXRDY}$ pin

Non-DMA mode	DMA mode
1 = at least 1 byte in FIFO	0-to-1 transition when FIFO becomes full
0 = FIFO empty	1-to-0 transition when FIFO goes below trigger level

6.10 Loop-back mode

The internal loop-back capability allows on-board diagnostics. In the loop-back mode, the normal modem interface pins are disconnected and reconfigured for loop-back internally (see Figure 5). MCR[3:0] register bits are used for controlling loop-back diagnostic testing. In the loop-back mode, the transmitter output (TX) and the receiver input (RX) are disconnected from their associated interface pins, and instead are connected together internally. The $\overline{CTS}$, $\overline{DSR}$, $\overline{CD}$, and $\overline{RI}$ are disconnected from their normal modem control inputs pins, and instead are connected internally to $\overline{RTS}$, $\overline{DTR}$, MCR[3] ($\overline{OP2}$) and

© Koninklijke Philips Electronics N.V. 2005. All rights reserved.

MCR[2] ($\overline{OP1}$). Loop-back test data is entered into the transmit holding register via the user data bus interface, D[7:0]. The transmit UART serializes the data and passes the serial data to the receive UART via the internal loop-back connection. The receive UART converts the serial data back into parallel data that is then made available at the user data interface D[7:0]. The user optionally compares the received data to the initial transmitted data for verifying error-free operation of the UART TX/RX circuits.

In this mode, the receiver and transmitter interrupts are fully operational. The modem control interrupts are also operational.

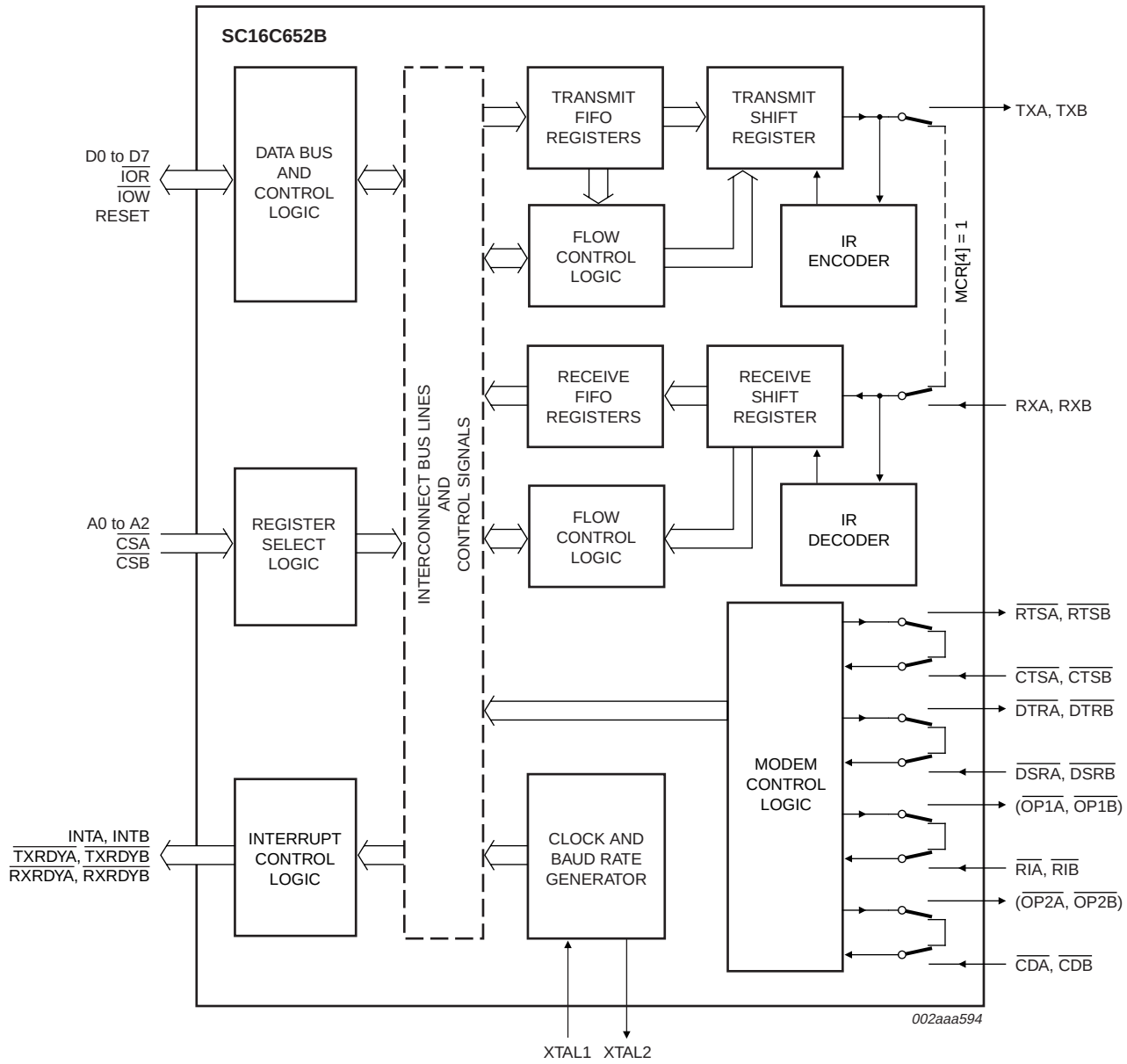

Fig 5. Internal loop-back mode diagram

© Koninklijke Philips Electronics N.V. 2005. All rights reserved.

6.11 Sleep mode

Sleep mode is an enhanced feature of the SC16C652B UART. It is enabled when EFR[4], the enhanced functions bit, is set **and** when IER[4] of both channels are set. Sleep mode is entered when:

- Modem input pins are not toggling.
- The serial data input line, RX, is idle (logic HIGH).
- The TX FIFO and TX shift register are empty.
- There are no interrupts pending.

Remark: Sleep mode will **not** be entered if there is data in the RX FIFO.

In Sleep mode, the UART clock and baud rate clock are stopped. Since most registers are clocked using these clocks, the power consumption is greatly reduced.

Remark: Writing to the divisor latches, DLL and DLH, to set the baud clock, must not be done during Sleep mode. Therefore, it is advisable to disable Sleep mode using IER[4] before writing to DLL or DLH.

SC16C652B resumes normal operation by any of the following:

- Receives a start bit on RXA/RXB pin.
- Data is loaded into transmit FIFO.
- A change of state on any of the modem input pins

If the device is awakened by one of the conditions described above, it will return to the Sleep mode automatically after the last character is transmitted or read by the user. The device will stay in Sleep mode until it is disabled by setting any channel's IER bit 4 to a logic 0.

© Koninklijke Philips Electronics N.V. 2005. All rights reserved.

7. Register descriptions

Table 9 details the assigned bit functions for the SC16C652B internal registers. The assigned bit functions are more fully defined in Section 7.1 through Section 7.11.

Table 9: SC16C652B internal registers

A2	A1	A0	Register	Default [1]	Bit 7	Bit 6	Bit 5	Bit 4	Bit 3	Bit 2	Bit 1	Bit 0
General Register Set [3]												
0	0	0	RHR	XX	bit 7	bit 6	bit 5	bit 4	bit 3	bit 2	bit 1	bit 0
0	0	0	THR	XX	bit 7	bit 6	bit 5	bit 4	bit 3	bit 2	bit 1	bit 0
0	0	1	IER	00	CTS interrupt [2]	RTS interrupt [2]	Xoff interrupt [2]	Sleep mode [2]	modem status interrupt Rx	receive line status interrupt	transmit holding register interrupt	receive holding register
0	1	0	FCR	00	RCVR trigger (MSB)	RCVR trigger (LSB)	TX trigger (MSB) [2]	TX trigger (LSB) [2]	DMA mode select	XMIT FIFO reset	RCVR FIFO reset	FIFOs enable
0	1	0	ISR	01	FIFOs enabled	FIFOs enabled	INT priority bit 4	INT priority bit 3	INT priority bit 2	INT priority bit 1	INT priority bit 0	INT status
0	1	1	LCR	00	divisor latch enable	set break	set parity	even parity	parity enable	stop bits	word length bit 1	word length bit 0
1	0	0	MCR	00	clock select [2]	IRDA enable	0	loop back	$\overline{OP2}$/INT enable	($\overline{OP1}$)	$\overline{RTS}$	$\overline{DTR}$
1	0	1	LSR	60	FIFO data error	THR and TSR empty	THR empty	break interrupt	framing error	parity error	overrun error	receive data ready
1	1	0	MSR	X0	CD	RI	DSR	CTS	$\Delta\overline{CD}$	$\Delta\overline{RI}$	$\Delta\overline{DSR}$	$\Delta\overline{CTS}$
1	1	1	SPR	FF	bit 7	bit 6	bit 5	bit 4	bit 3	bit 2	bit 1	bit 0
Special Register Set [4]												
0	0	0	DLL	XX	bit 7	bit 6	bit 5	bit 4	bit 3	bit 2	bit 1	bit 0
0	0	1	DLM	XX	bit 15	bit 14	bit 13	bit 12	bit 11	bit 10	bit 9	bit 8
Enhanced Register Set [5]												
0	1	0	EFR	00	Auto CTS	Auto RTS	special character select	Enable IER[7:4], ISR[5:4], FCR[5:4], MCR[7:5]	Cont-3 Tx, Rx Control	Cont-2 Tx, Rx Control	Cont-1 Tx, Rx Control	Cont-0 Tx, Rx Control
1	0	0	Xon-1	00	bit 7	bit 6	bit 5	bit 4	bit 3	bit 2	bit 1	bit 0
1	0	1	Xon-2	00	bit 15	bit 14	bit 13	bit 12	bit 11	bit 10	bit 9	bit 8
1	1	0	Xoff-1	00	bit 7	bit 6	bit 5	bit 4	bit 3	bit 2	bit 1	bit 0
1	1	1	Xoff-2	00	bit 15	bit 14	bit 13	bit 12	bit 11	bit 10	bit 9	bit 8

[1] The value shown in represents the register's initialized HEX value; X = not applicable.

[2] This bit is only accessible when EFR[4] is set.

[3] Accessible only when LCR[7] is logic 0.

[4] Baud rate registers accessible only when LCR[7] is logic 1.

[5] Enhanced Feature Register, Xon1/Xon2 and Xoff1/Xoff2 are accessible only when LCR is set to 'BFh'.

© Koninklijke Philips Electronics N.V. 2005. All rights reserved.

7.1 Transmit (THR) and Receive (RHR) Holding Registers

The serial transmitter section consists of an 8-bit Transmit Hold Register (THR) and Transmit Shift Register (TSR). The status of the THR is provided in the Line Status Register (LSR). Writing to the THR transfers the contents of the data bus (D7 to D0) to the TSR and UART via the THR, providing that the THR is empty. The THR empty flag in the LSR will be set to a logic 1 when the transmitter is empty or when data is transferred to the TSR. Note that a write operation can be performed when the THR empty flag is set (logic 0 = at least one byte in FIFO/THR, logic 1 = FIFO/THR empty).

The serial receive section also contains an 8-bit Receive Holding Register (RHR) and a Receive Serial Shift Register (RSR). Receive data is removed from the SC16C652B and receive FIFO by reading the RHR. The receive section provides a mechanism to prevent false starts. On the falling edge of a start or false start bit, an internal receiver counter starts counting clocks at the 16× clock rate. After $7\frac{1}{2}$ clocks, the start bit time should be shifted to the center of the start bit. At this time the start bit is sampled, and if it is still a logic 0 it is validated. Evaluating the start bit in this manner prevents the receiver from assembling a false character. Receiver status codes will be posted in the LSR.

7.2 Interrupt Enable Register (IER)

The Interrupt Enable Register (IER) masks the interrupts from receiver ready, transmitter empty, line status and modem status registers. These interrupts would normally be seen on the INTA, INTB output pins.

Table 10: Interrupt Enable Register bits description

Bit	Symbol	Description
7	IER[7]	CTS interrupt. logic 0 = disable the CTS interrupt (normal default condition) logic 1 = enable the CTS interrupt. The SC16C652B issues an interrupt when the CTS pin transitions from a logic 0 to a logic 1.
6	IER[6]	RTS interrupt. logic 0 = disable the RTS interrupt (normal default condition) logic 1 = enable the RTS interrupt. The SC16C652B issues an interrupt when the RTS pin transitions from a logic 0 to a logic 1.
5	IER[5]	Xoff interrupt. logic 0 = disable the software flow control, receive Xoff interrupt (normal default condition) logic 1 = enable the software flow control, receive Xoff interrupt.
4	IER[4]	Sleep mode. logic 0 = disable Sleep mode (normal default condition) logic 1 = enable Sleep mode
3	IER[3]	Modem Status Interrupt. This interrupt will be issued whenever there is a modem status change as reflected in MSR[3:0]. logic 0 = disable the modem status register interrupt (normal default condition) logic 1 = enable the modem status register interrupt
2	IER[2]	Receive Line Status interrupt. This interrupt will be issued whenever a receive data error condition exists as reflected in LSR[4:1]. logic 0 = disable the receiver line status interrupt (normal default condition) logic 1 = enable the receiver line status interrupt

© Koninklijke Philips Electronics N.V. 2005. All rights reserved.

Table 10: Interrupt Enable Register bits description *...continued*

Bit	Symbol	Description
1	IER[1]	Transmit Holding Register interrupt. In the 16C450 mode, this interrupt will be issued whenever the THR is empty, and is associated with LSR[5]. In the FIFO modes, this interrupt will be issued whenever the FIFO is empty. logic 0 = disable the Transmit Holding Register Empty (TXRDY) interrupt (normal default condition) logic 1 = enable the TXRDY (ISR level 3) interrupt
0	IER[0]	Receive Holding Register. In the 16C450 mode, this interrupt will be issued when the RHR has data, or is cleared when the RHR is empty. In the FIFO mode, this interrupt will be issued when the FIFO has reached the programmed trigger level or is cleared when the FIFO drops below the trigger level. logic 0 = disable the receiver ready (ISR level 2, RXRDY) interrupt (normal default condition) logic 1 = enable the RXRDY (ISR level 2) interrupt

7.2.1 IER versus Transmit/Receive FIFO interrupt mode operation

When the receive FIFO (FCR[0] = logic 1), and receive interrupts (IER[0] = logic 1) are enabled, the receive interrupts and register status will reflect the following:

- The receive RXRDY interrupt (Level 2 ISR interrupt) is issued to the external CPU when the receive FIFO has reached the programmed trigger level. It will be cleared when the receive FIFO drops below the programmed trigger level.
- Receive FIFO status will also be reflected in the user accessible ISR register when the receive FIFO trigger level is reached. Both the ISR register receive status bit and the interrupt will be cleared when the FIFO drops below the trigger level.
- The receive data ready bit (LSR[0]) is set as soon as a character is transferred from the shift register (RSR) to the receive FIFO. It is reset when the FIFO is empty.
- When the Transmit FIFO and interrupts are enabled, an interrupt is generated when the transmit FIFO is empty due to the unloading of the data by the TSR and UART for transmission via the transmission media. The interrupt is cleared either by reading the ISR, or by loading the THR with new data characters.

7.2.2 IER versus Receive/Transmit FIFO polled mode operation

When FCR[0] = logic 1, resetting IER[3:0] enables the SC16C652B in the FIFO polled mode of operation. In this mode, interrupts are not generated and the user must poll the LSR register for TX and/or RX data status. Since the receiver and transmitter have separate bits in the LSR either or both can be used in the polled mode by selecting respective transmit or receive control bit(s).

- LSR[0] will be a logic 1 as long as there is one byte in the receive FIFO.
- LSR[4:1] will provide the type of receive errors, or a receive break, if encountered.
- LSR[5] will indicate when the transmit FIFO is empty.
- LSR[6] will indicate when both the transmit FIFO and transmit shift register are empty.
- LSR[7] will show if any FIFO data errors occurred.

© Koninklijke Philips Electronics N.V. 2005. All rights reserved.

7.3 FIFO Control Register (FCR)

This register is used to enable the FIFOs, clear the FIFOs, set the receive FIFO trigger levels, and select the DMA mode.

7.3.1 DMA mode

7.3.1.1 Mode 0 (FCR bit 3 = 0)

Set and enable the interrupt for each single transmit or receive operation, and is similar to the 16C450 mode. Transmit Ready ($\overline{TXRDY}$) will go to a logic 0 whenever the FIFO (THR, if FIFO is not enabled) is empty. Receive Ready ($\overline{RXRDY}$) will go to a logic 0 whenever the Receive Holding Register (RHR) is loaded with a character.

7.3.1.2 Mode 1 (FCR bit 3 = 1)

Set and enable the interrupt in a block mode operation. The transmit interrupt is set when the transmit FIFO is below the programmed trigger level. The receive interrupt is set when the receive FIFO fills to the programmed trigger level. However, the FIFO continues to fill regardless of the programmed level until the FIFO is full. $\overline{RXRDY}$ remains a logic 0 as long as the FIFO fill level is above the programmed trigger level.

7.3.2 FIFO mode

Table 11: FIFO Control Register bits description

Bit	Symbol	Description
7:6	FCR[7:6]	RCVR trigger. These bits are used to set the trigger level for the receive FIFO interrupt. An interrupt is generated when the number of characters in the FIFO equals the programmed trigger level. However, the FIFO will continue to be loaded until it is full. Refer to Table 12.
5:4	FCR[5:4]	Logic 0 or cleared is the default condition; TX trigger level = 16. These bits are used to set the trigger level for the transmit FIFO interrupt. The SC16C652B will issue a transmit empty interrupt when the number of characters in FIFO drops below the selected trigger level. Refer to Table 13.
3	FCR[3]	DMA mode select. logic 0 = set DMA mode ‘0’ (normal default condition) logic 1 = set DMA mode ‘1’ **Transmit operation in mode ‘0’:** When the SC16C652B is in the 16C450 mode (FIFOs disabled; FCR[0] = logic 0) or in the FIFO mode (FIFOs enabled; FCR[0] = logic 1; FCR[3] = logic 0), and when there are no characters in the transmit FIFO or transmit holding register, the $\overline{TXRDY}$ pin will be a logic 0. Once active, the $\overline{TXRDY}$ pin will go to a logic 1 after the first character is loaded into the transmit holding register. **Receive operation in mode ‘0’:** When the SC16C652B is in 16C450 mode, or in the FIFO mode (FCR[0] = logic 1; FCR[3] = logic 0) and there is at least one character in the receive FIFO, the $\overline{RXRDY}$ pin will be a logic 0. Once active, the $\overline{RXRDY}$ pin will go to a logic 1 when there are no more characters in the receiver.

© Koninklijke Philips Electronics N.V. 2005. All rights reserved.

Table 11: FIFO Control Register bits description *...continued*

Bit	Symbol	Description
3 (cont.)		**Transmit operation in mode '1':** When the SC16C652B is in FIFO mode (FCR[0] = logic 1; FCR[3] = logic 1), the $\overline{\text{TXRDY}}$ pin will be a logic 1 when the transmit FIFO is completely full. It will be a logic 0 when the trigger level has been reached. **Receive operation in mode '1':** When the SC16C652B is in FIFO mode (FCR[0] = logic 1; FCR[3] = logic 1) and the trigger level has been reached, or a Receive Time-Out has occurred, the $\overline{\text{RXRDY}}$ pin will go to a logic 0. Once activated, it will go to a logic 1 after there are no more characters in the FIFO.
2	FCR[2]	XMIT FIFO reset. logic 0 = no FIFO transmit reset (normal default condition) logic 1 = clears the contents of the transmit FIFO and resets the FIFO counter logic (the transmit shift register is not cleared or altered). This bit will return to a logic 0 after clearing the FIFO.
1	FCR[1]	RCVR FIFO reset. logic 0 = no FIFO receive reset (normal default condition) logic 1 = clears the contents of the receive FIFO and resets the FIFO counter logic (the receive shift register is not cleared or altered). This bit will return to a logic 0 after clearing the FIFO.
0	FCR[0]	FIFO enable. logic 0 = disable the transmit and receive FIFO (normal default condition) logic 1 = enable the transmit and receive FIFO. **This bit must be a '1' when other FCR bits are written to, or they will not be programmed.**

Table 12: RCVR trigger levels

FCR[7]	FCR[6]	RX FIFO trigger level (bytes)
0	0	8
0	1	16
1	0	24
1	1	28

Table 13: TX FIFO trigger levels

FCR[5]	FCR[4]	TX FIFO trigger level (bytes)
0	0	16
0	1	8
1	0	24
1	1	30

© Koninklijke Philips Electronics N.V. 2005. All rights reserved.

7.4 Interrupt Status Register (ISR)

The SC16C652B provides six levels of prioritized interrupts to minimize external software interaction. The Interrupt Status Register (ISR) provides the user with six interrupt status bits. Performing a read cycle on the ISR will provide the user with the highest pending interrupt level to be serviced. No other interrupts are acknowledged until the pending interrupt is serviced. A lower level interrupt may be seen after servicing the higher level interrupt and re-reading the interrupt status bits. Table 14 “Interrupt source” shows the data values (bits 5:0) for the six prioritized interrupt levels and the interrupt sources associated with each of these interrupt levels.

Table 14: Interrupt source

Priority level	ISR[5]	ISR[4]	ISR[3]	ISR[2]	ISR[1]	ISR[0]	Source of the interrupt
1	0	0	0	1	1	0	LSR (Receiver Line Status Register)
2	0	0	0	1	0	0	RXRDY (Received Data Ready)
2	0	0	1	1	0	0	RXRDY (Receive Data time-out)
3	0	0	0	0	1	0	TXRDY (Transmitter Holding Register Empty)
4	0	0	0	0	0	0	MSR (Modem Status Register)
5	0	1	0	0	0	0	RXRDY (Received Xoff signal)/ Special character
6	1	0	0	0	0	0	CTS, RTS change of state

Table 15: Interrupt Status Register bits description

Bit	Symbol	Description
7:6	ISR[7:6]	FIFOs enabled. These bits are set to a logic 0 when the FIFOs are not being used in the 16C450 mode. They are set to a logic 1 when the FIFOs are enabled in the SC16C652B mode. logic 0 or cleared = default condition
5:4	ISR[5:4]	INT priority bits 4:3. These bits are enabled when EFR[4] is set to a logic 1. ISR[4] indicates that matching Xoff character(s) have been detected. ISR[5] indicates that CTS, RTS have been generated. Note that once set to a logic 1, the ISR[4] bit will stay a logic 1 until Xon character(s) are received. logic 0 or cleared = default condition
3:1	ISR[3:1]	INT priority bits 2:0. These bits indicate the source for a pending interrupt at interrupt priority levels 1, 2, and 3 (see Table 14). logic 0 or cleared = default condition
0	ISR[0]	INT status. logic 0 = an interrupt is pending and the ISR contents may be used as a pointer to the appropriate interrupt service routine logic 1 = no interrupt pending (normal default condition)

© Koninklijke Philips Electronics N.V. 2005. All rights reserved.

7.5 Line Control Register (LCR)

The Line Control Register is used to specify the asynchronous data communication format. The word length, the number of stop bits, and the parity are selected by writing the appropriate bits in this register.

Table 16: Line Control Register bits description

Bit	Symbol	Description
7	LCR[7]	Divisor latch enable. The internal baud rate counter latch and Enhanced Feature mode enable. logic 0 = divisor latch disabled (normal default condition) logic 1 = divisor latch enabled
6	LCR[6]	Set break. When enabled, the Break control bit causes a break condition to be transmitted (the TX output is forced to a logic 0 state). This condition exists until disabled by setting LCR[6] to a logic 0. logic 0 = no TX break condition (normal default condition) logic 1 = forces the transmitter output (TX) to a logic 0 for alerting the remote receiver to a line break condition
5:3	LCR[5:3]	Programs the parity conditions (see Table 17).
2	LCR[2]	Stop bits. The length of stop bit is specified by this bit in conjunction with the programmed word length (see Table 18). logic 0 or cleared = default condition
1:0	LCR[1:0]	Word length bits 1, 0. These two bits specify the word length to be transmitted or received (see Table 19). logic 0 or cleared = default condition

Table 17: LCR[5:3] parity selection

LCR[5]	LCR[4]	LCR[3]	Parity selection
X	X	0	no parity
X	0	1	odd parity
0	1	1	even parity
0	0	1	forced parity ‘1’
1	1	1	forced parity ‘0’

Table 18: LCR[2] stop bit length

LCR[2]	Word length (bits)	Stop bit length (bit times)
0	5, 6, 7, 8	1
1	5	1½
1	6, 7, 8	2

Table 19: LCR[1:0] word length

LCR[1]	LCR[0]	Word length (bits)
0	0	5
0	1	6
1	0	7
1	1	8

© Koninklijke Philips Electronics N.V. 2005. All rights reserved.

7.6 Modem Control Register (MCR)

This register controls the interface with the modem or a peripheral device.

Table 20: Modem Control Register bits description

Bit	Symbol	Description
7	MCR[7]	Clock select logic 0 = divide-by-1 clock input logic 1 = divide-by-4 clock input
6	MCR[6]	IR enable (see Figure 17). logic 0 = enable the standard modem receive and transmit input/output interface (normal default condition) logic 1 = enable infrared IrDA receive and transmit inputs/outputs. While in this mode, the TX/RX output/inputs are routed to the infrared encoder/decoder. The data input and output levels will conform to the IrDA infrared interface requirement. As such, while in this mode, the infrared TX output will be a logic 0 during idle data conditions.
5	MCR[5]	Reserved; set to ‘0’.
4	MCR[4]	Loop-back. Enable the local loop-back mode (diagnostics). In this mode the transmitter output ($\overline{TX}$) and the receiver input ($\overline{RX}$), $\overline{CTS}$, $\overline{DSR}$, $\overline{CD}$, and $\overline{RI}$ are disconnected from the SC16C652B I/O pins. Internally the modem data and control pins are connected into a loop-back data configuration (see Figure 5). In this mode, the receiver and transmitter interrupts remain fully operational. The Modem Control Interrupts are also operational, but the interrupts’ sources are switched to the lower four bits of the Modem Control. Interrupts continue to be controlled by the IER register. logic 0 = disable Loop-back mode (normal default condition) logic 1 = enable local Loop-back mode (diagnostics)
3	MCR[3]	$\overline{OP2}$/INT enable logic 0 = forces INT (A, B) outputs to the 3-state mode and sets $\overline{OP2}$ to a logic 1 (normal default condition) logic 1 = forces the INT (A, B) outputs to the active mode and sets $\overline{OP2}$ to a logic 0
2	MCR[2]	($\overline{OP1}$). $\overline{OP1A}$/$\overline{OP1B}$ are not available as an external signal in the SC16C652B. This bit is instead used in the Loop-back mode only. In the Loop-back mode, this bit is used to write the state of the modem $\overline{RI}$ interface signal.
1	MCR[1]	$\overline{RTS}$ logic 0 = force $\overline{RTS}$ output to a logic 1 (normal default condition) logic 1 = force $\overline{RTS}$ output to a logic 0
0	MCR[0]	$\overline{DTR}$ logic 0 = force $\overline{DTR}$ output to a logic 1 (normal default condition) logic 1 = force $\overline{DTR}$ output to a logic 0

© Koninklijke Philips Electronics N.V. 2005. All rights reserved.

7.7 Line Status Register (LSR)

This register provides the status of data transfers between the SC16C652B and the CPU.

Table 21: Line Status Register bits description

Bit	Symbol	Description
7	LSR[7]	FIFO data error. logic 0 = no error (normal default condition) logic 1 = at least one parity error, framing error or break indication is in the current FIFO data. This bit is cleared when there are no remaining error flags associated with the remaining data in the FIFO.
6	LSR[6]	THR and TSR empty. This bit is the Transmit Empty indicator. This bit is set to a logic 1 whenever the transmit holding register and the transmit shift register are both empty. It is reset to logic 0 whenever either the THR or TSR contains a data character. In the FIFO mode, this bit is set to ‘1’ whenever the transmit FIFO and transmit shift register are both empty.
5	LSR[5]	THR empty. This bit is the Transmit Holding Register Empty indicator. This bit indicates that the UART is ready to accept a new character for transmission. In addition, this bit causes the UART to issue an interrupt to CPU when the THR interrupt enable is set. The THR bit is set to a logic 1 when a character is transferred from the transmit holding register into the transmitter shift register. The bit is reset to a logic 0 concurrently with the loading of the transmitter holding register by the CPU. In the FIFO mode, this bit is set when the transmit FIFO is empty; it is cleared when at least 1 byte is written to the transmit FIFO.
4	LSR[4]	Break interrupt. logic 0 = no break condition (normal default condition) logic 1 = the receiver received a break signal (RX was a logic 0 for one character frame time). In the FIFO mode, only one break character is loaded into the FIFO.
3	LSR[3]	Framing error. logic 0 = no framing error (normal default condition) logic 1 = framing error. The receive character did not have a valid stop bit(s). In the FIFO mode, this error is associated with the character at the top of the FIFO.
2	LSR[2]	Parity error. logic 0 = no parity error (normal default condition logic 1 = parity error. The receive character does not have correct parity information and is suspect. In the FIFO mode, this error is associated with the character at the top of the FIFO.
1	LSR[1]	Overrun error. logic 0 = no overrun error (normal default condition) logic 1 = overrun error. A data overrun error occurred in the Receive Shift Register. This happens when additional data arrives while the FIFO is full. In this case, the previous data in the shift register is overwritten. Note that under this condition, the data byte in the Receive Shift Register is not transferred into the FIFO, therefore the data in the FIFO is not corrupted by the error.
0	LSR[0]	Receive data ready. logic 0 = no data in Receive Holding Register or FIFO (normal default condition) logic 1 = data has been received and is saved in the Receive Holding Register or FIFO

© Koninklijke Philips Electronics N.V. 2005. All rights reserved.

7.8 Modem Status Register (MSR)

This register provides the current state of the control interface signals from the modem, or other peripheral device to which the SC16C652B is connected. Four bits of this register are used to indicate the changed information. These bits are set to a logic 1 whenever a control input from the modem changes state. These bits are set to a logic 0 whenever the CPU reads this register.

Table 22: Modem Status Register bits description

Bit	Symbol	Description
7	MSR[7]	CD. During normal operation, this bit is the complement of the $\overline{CD}$ input. Reading this bit in the loop-back mode produces the state of MCR[3] ($\overline{OP2}$).
6	MSR[6]	RI. During normal operation, this bit is the complement of the $\overline{RI}$ input. Reading this bit in the loop-back mode produces the state of MCR[2] ($\overline{OP1}$).
5	MSR[5]	DSR. During normal operation, this bit is the complement of the $\overline{DSR}$ input. During the loop-back mode, this bit is equivalent to MCR[0] ($\overline{DTR}$).
4	MSR[4]	CTS. During normal operation, this bit is the complement of the $\overline{CTS}$ input. During the loop-back mode, this bit is equivalent to MCR[1] ($\overline{RTS}$).
3	MSR[3]	$\Delta\overline{CD}$ [1] logic 0 = no $\overline{CD}$ change (normal default condition) logic 1 = the $\overline{CD}$ input to the SC16C652B has changed state since the last time it was read. A modem Status Interrupt will be generated.
2	MSR[2]	$\Delta\overline{RI}$ [1] logic 0 = no $\overline{RI}$ change (normal default condition) logic 1 = the $\overline{RI}$ input to the SC16C652B has changed from a logic 0 to a logic 1. A modem Status Interrupt will be generated.
1	MSR[1]	$\Delta\overline{DSR}$ [1] logic 0 = no $\overline{DSR}$ change (normal default condition) logic 1 = the $\overline{DSR}$ input to the SC16C652B has changed state since the last time it was read. A modem Status Interrupt will be generated.
0	MSR[0]	$\Delta\overline{CTS}$ [1] logic 0 = no $\overline{CTS}$ change (normal default condition) logic 1 = the $\overline{CTS}$ input to the SC16C652B has changed state since the last time it was read. A modem Status Interrupt will be generated.

[1] Whenever any MSR bit 3:0 is set to logic 1, a Modem Status Interrupt will be generated.

7.9 Scratchpad Register (SPR)

The SC16C652B provides a temporary data register to store 8 bits of user information.

© Koninklijke Philips Electronics N.V. 2005. All rights reserved.

7.10 Enhanced Feature Register (EFR)

Enhanced features are enabled or disabled using this register.

Bits 0 through 4 provide single or dual character software flow control selection. When the Xon1 and Xon2 and/or Xoff1 and Xoff2 modes are selected, the double 8-bit words are concatenated into two sequential numbers.

Table 23: Enhanced Feature Register bits description

Bit	Symbol	Description
7	EFR[7]	Automatic CTS flow control. logic 0 = automatic CTS flow control is disabled (normal default condition) logic 1 = enable automatic CTS flow control. Transmission will stop when $\overline{CTS}$ goes to a logical 1. Transmission will resume when the $\overline{CTS}$ pin returns to a logical 0.
6	EFR[6]	Automatic RTS flow control. Automatic RTS may be used for hardware flow control by enabling EFR[6]. When Auto-RTS is selected, an interrupt will be generated when the receive FIFO is filled to the programmed trigger level and $\overline{RTS}$ will go to a logic 1 at the next trigger level. $\overline{RTS}$ will return to a logic 0 when data is unloaded below the next lower trigger level (programmed trigger level 1). The state of this register bit changes with the status of the hardware flow control. $\overline{RTS}$ functions normally when hardware flow control is disabled. logic 0 = automatic RTS flow control is disabled (normal default condition) logic 1 = enable automatic RTS flow control
5	EFR[5]	Special Character Detect. logic 0 = special character detect disabled (normal default condition) logic 1 = special character detect enabled. The SC16C652B compares each incoming receive character with Xoff2 data. If a match exists, the received data will be transferred to FIFO and ISR[4] will be set to indicate detection of special character. Bit-0 in the X-registers corresponds with the LSB bit for the receive character. When this feature is enabled, the normal software flow control must be disabled (EFR[3:0] must be set to a logic 0).
4	EFR[4]	Enhanced function control bit. The content of IER[7:4], ISR[5:4], FCR[5:4], and MCR[7:5] can be modified and latched. After modifying any bits in the enhanced registers, EFR[4] can be set to a logic 0 to latch the new values. This feature prevents existing software from altering or overwriting the SC16C652B enhanced functions. logic 0 = disable/latch enhanced features. IER[7:4], ISR[5:4], FCR[5:4], and MCR[7:5] are saved to retain the user settings, then IER[7:4] ISR[5:4], FCR[5:4], and MCR[7:5] are set to a logic 0 to be compatible with SC16C554 mode. (Normal default condition.) logic 1 = enables the enhanced functions. When this bit is set to a logic 1, all enhanced features of the SC16C652B are enabled and user settings stored during a reset will be restored.
3:0	EFR[3:0]	Cont-3:0 Tx, Rx control. Logic 0 or cleared is the default condition. Combinations of software flow control can be selected by programming these bits. See Table 24.

© Koninklijke Philips Electronics N.V. 2005. All rights reserved.

Table 24: Software flow control functions [1]

Cont-3	Cont-2	Cont-1	Cont-0	TX, RX software flow controls
0	0	X	X	No transmit flow control
1	0	X	X	Transmit Xon1/Xoff1
0	1	X	X	Transmit Xon2/Xoff2
1	1	X	X	Transmit Xon1 and Xon2/Xoff1 and Xoff2
X	X	0	0	No receive flow control
X	X	1	0	Receiver compares Xon1/Xoff1
X	X	0	1	Receiver compares Xon2/Xoff2
1	0	1	1	Transmit Xon1/Xoff1
				Receiver compares Xon1 and Xon2, Xoff1 and Xoff2
0	1	1	1	Transmit Xon2/Xoff2
				Receiver compares Xon1 and Xon2/Xoff1 and Xoff2
1	1	1	1	Transmit Xon1 and Xon2/Xoff1 and Xoff2
				Receiver compares Xon1 and Xon2/Xoff1 and Xoff2

[1] When using a software flow control the Xon/Xoff characters cannot be used for data transfer.

7.11 SC16C652B external reset condition

Table 25: Reset state for registers

Register	Reset state
IER	IER[7:0] = 0
FCR	FCR[7:0] = 0
ISR	ISR[7:1] = 0; ISR[0] = 1
LCR	LCR[7:0] = 0
MCR	MCR[7:0] = 0
LSR	LSR[7] = 0; LSR[6:5] = 1; LSR[4:0] = 0
MSR	MSR[7:4] = input signals; MSR[3:0] = 0
SPR	SFR[7:0] = 1
DLL	DLL[7:0] = X
DLM	DLM[7:0] = X

Table 26: Reset state for outputs

Output	Reset state
TXA, TXB	logic 1
$\overline{OP2A}$, $\overline{OP2B}$	logic 1
$\overline{RTSA}$, $\overline{RTSB}$	logic 1
$\overline{DTRA}$, $\overline{DTRB}$	logic 1
INTA, INTB	3-state condition

© Koninklijke Philips Electronics N.V. 2005. All rights reserved.

8. Limiting values

Table 27: Limiting values

In accordance with the Absolute Maximum Rating System (IEC 60134).

Symbol	Parameter	Conditions	Min	Max	Unit
V_{CC}	supply voltage		-	7	V
V_n	voltage at any pin		GND – 0.3	V_{CC} + 0.3	V
T_{amb}	ambient temperature	operating in free air	–40	+85	°C
T_{stg}	storage temperature		–65	+150	°C
$P_{tot(pack)}$	total power dissipation per package		-	500	mW

9. Static characteristics

Table 28: Static characteristics

T_{amb} = –40 °C to +85 °C; tolerance of V_{CC} = ± 10 %; unless otherwise specified.

Symbol	Parameter	Conditions	V_{CC} = 2.5 V		V_{CC} = 3.3 V		V_{CC} = 5.0 V		Unit
			Min	Max	Min	Max	Min	Max	
$V_{IL(CK)}$	LOW-level clock input voltage		–0.3	0.45	–0.3	0.6	–0.5	0.6	V
$V_{IH(CK)}$	HIGH-level clock input voltage		1.8	V_{CC}	2.4	V_{CC}	3.0	V_{CC}	V
V_{IL}	LOW-level input voltage (except X1 clock)		–0.3	0.65	–0.3	0.8	–0.5	0.8	V
V_{IH}	HIGH-level input voltage (except X1 clock)		1.6	-	2.0	-	2.2	-	V
V_{OL}	LOW-level output voltage on all outputs [1]	I_{OL} = 5 mA (databus)	-	-	-	-	-	0.4	V
		I_{OL} = 4 mA (other outputs)	-	-	-	0.4	-	-	V
		I_{OL} = 2 mA (databus)	-	0.4	-	-	-	-	V
		I_{OL} = 1.6 mA (other outputs)	-	0.4	-	-	-	-	V
V_{OH}	HIGH-level output voltage	I_{OH} = –5 mA (databus)	-	-	-	-	2.4	-	V
		I_{OH} = –1 mA (other outputs)	-	-	2.0	-	-	-	V
		I_{OH} = –800 µA (data bus)	1.85	-	-	-	-	-	V
		I_{OH} = –400 µA (other outputs)	1.85	-	-	-	-	-	V
I_{LIL}	LOW-level input leakage current		-	±10	-	±10	-	±10	µA
I_{CL}	clock leakage current		-	±30	-	±30	-	±30	µA
I_{CC}	supply current	f = 5 MHz	-	3.5	-	4.5	-	4.5	mA
$I_{CCsleep}$	sleep current	[2]	-	50	-	50	-	50	µA
C_i	input capacitance		-	5	-	5	-	5	pF

[1] Except XTAL2, V_{OL} = 1 V typical.

[2] Sleep current might be higher if there is any activity on the UART data bus during Sleep mode.

© Koninklijke Philips Electronics N.V. 2005. All rights reserved.

10. Dynamic characteristics

Table 29: Dynamic characteristics

T_{amb} = −40 °C to +85 °C; tolerance of V_{CC} = ± 10 %; unless otherwise specified.

Symbol	Parameter	Conditions		V_{CC} = 2.5 V		V_{CC} = 3.3 V		V_{CC} = 5.0 V		Unit
				Min	Max	Min	Max	Min	Max	
t_{1w}, t_{2w}	clock pulse duration			10	-	6	-	6	-	ns
f_{XTAL}	oscillator/clock frequency		[1] [2]	-	48	-	80		80	MHz
t_{6s}	address set-up time			0	-	0	-	0	-	ns
t_{6h}	address hold time			0	-	0	-	0	-	ns
t_{7d}	$\overline{IOR}$ delay from chip select			10	-	10	-	10	-	ns
t_{7w}	$\overline{IOR}$ strobe width	25 pF load		77	-	26	-	23	-	ns
t_{7h}	chip select hold time from $\overline{IOR}$			0	-	0	-	0	-	ns
t_{9d}	read cycle delay	25 pF load		20	-	20	-	20	-	ns
t_{12d}	delay from $\overline{IOR}$ to data	25 pF load		-	77	-	26	-	23	ns
t_{12h}	data disable time	25 pF load		-	15	-	15	-	15	ns
t_{13d}	$\overline{IOW}$ delay from chip select			10	-	10	-	10	-	ns
t_{13w}	$\overline{IOW}$ strobe width			20	-	20	-	15	-	ns
t_{13h}	chip select hold time from $\overline{IOW}$			0	-	0	-	0	-	ns
t_{15d}	write cycle delay			25	-	25	-	20	-	ns
t_{16s}	data set-up time			20	-	20	-	15	-	ns
t_{16h}	data hold time			15	-	5	-	5	-	ns
t_{17d}	delay from $\overline{IOW}$ to output	25 pF load		-	100	-	33	-	29	ns
t_{18d}	delay to set interrupt from Modem input	25 pF load		-	100	-	24	-	23	ns
t_{19d}	delay to reset interrupt from $\overline{IOR}$	25 pF load		-	100	-	24	-	23	ns
t_{20d}	delay from stop to set interrupt		[3]	-	$1T_{RCLK}$	-	$1T_{RCLK}$	-	$1T_{RCLK}$	s
t_{21d}	delay from $\overline{IOR}$ to reset interrupt	25 pF load		-	100	-	29	-	28	ns
t_{22d}	delay from start to set interrupt			-	100	-	45	-	40	ns
t_{23d}	delay from $\overline{IOW}$ to transmit start		[3]	$8T_{RCLK}$	$24T_{RCLK}$	$8T_{RCLK}$	$24T_{RCLK}$	$8T_{RCLK}$	$24T_{RCLK}$	s
t_{24d}	delay from $\overline{IOW}$ to reset interrupt			-	100	-	45	-	40	ns
t_{25d}	delay from stop to set $\overline{RXRDY}$		[3]	-	$1T_{RCLK}$	-	$1T_{RCLK}$	-	$1T_{RCLK}$	s
t_{26d}	delay from $\overline{IOR}$ to reset $\overline{RXRDY}$			-	100	-	45	-	40	ns
t_{27d}	delay from $\overline{IOW}$ to set $\overline{TXRDY}$			-	100	-	45	-	40	ns

© Koninklijke Philips Electronics N.V. 2005. All rights reserved.

Table 29: Dynamic characteristics

T_{amb} = −40 °C to +85 °C; tolerance of V_{CC} = ± 10 %; unless otherwise specified.

Symbol	Parameter	Conditions		V_{CC} = 2.5 V		V_{CC} = 3.3 V		V_{CC} = 5.0 V		Unit
				Min	Max	Min	Max	Min	Max	
t_{28d}	delay from start to reset $\overline{TXRDY}$		[3]	-	$8T_{RCLK}$	-	$8T_{RCLK}$	-	$8T_{RCLK}$	s
t_{RESET}	RESET pulse width			200	-	40	-	40	-	ns
N	baud rate divisor			1	$(2^{16} – 1)$	1	$(2^{16} – 1)$	1	$(2^{16} – 1)$	

[1] Applies to external clock, crystal oscillator max 24 MHz.

[2] Maximum frequency = $\frac{1}{t_{3w}}$

[3] RCLK is an internal signal derived from divisor latch LSB (DLL) and divisor latch MSB (DLM) divisor latches.

10.1 Timing diagrams

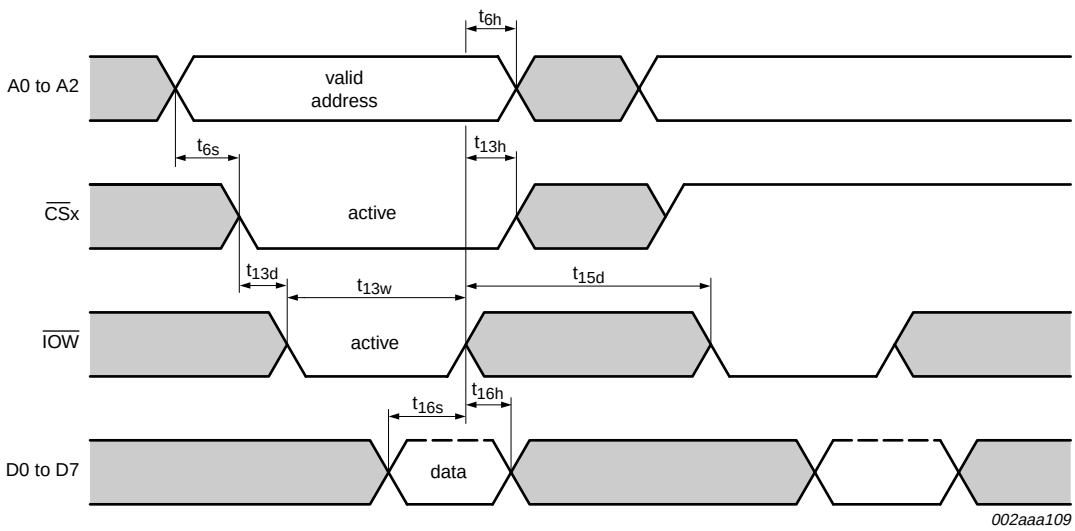

Fig 6. General write timing

© Koninklijke Philips Electronics N.V. 2005. All rights reserved.

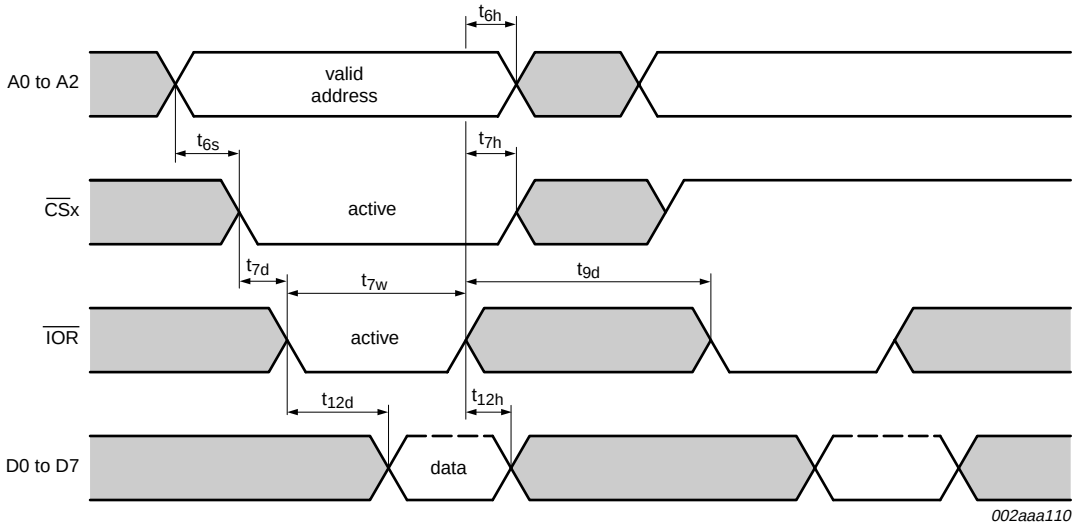

Fig 7. General read timing

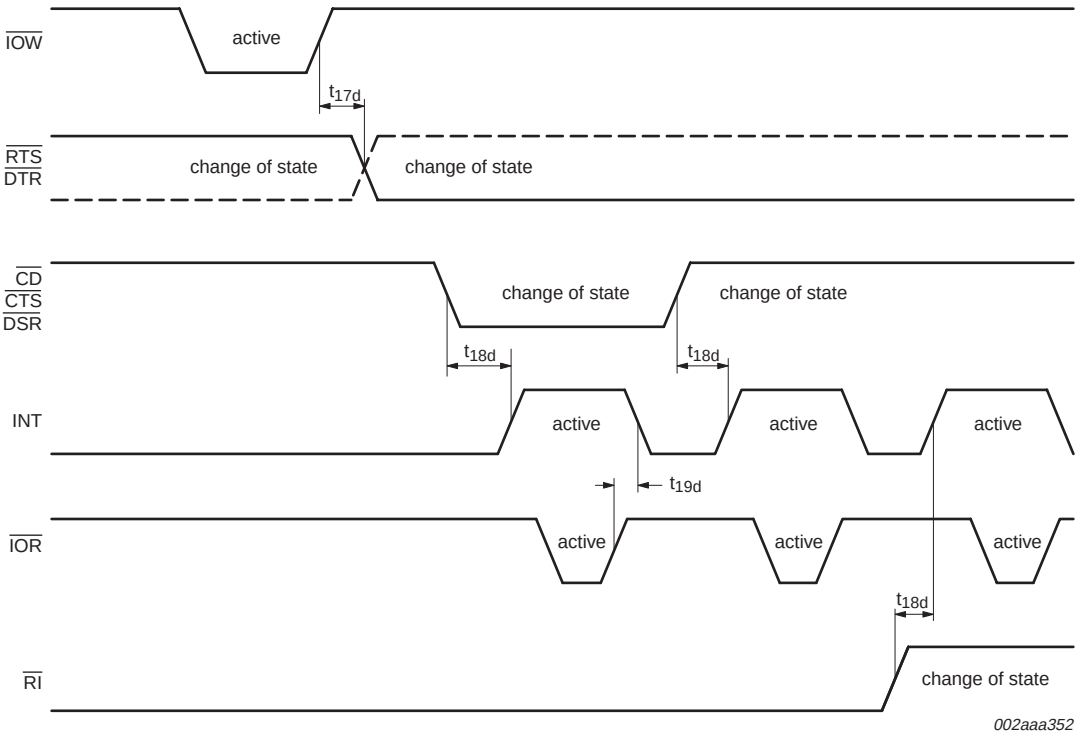

Fig 8. Modem input/output timing

© Koninklijke Philips Electronics N.V. 2005. All rights reserved.

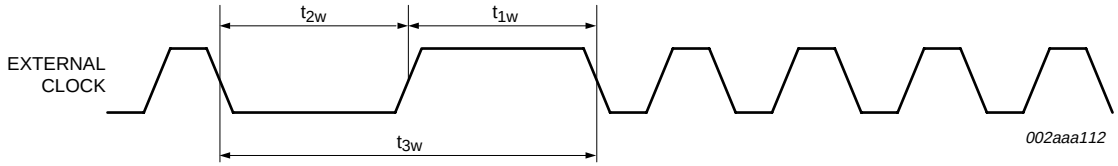

$$f_{XTAL} = \frac{1}{t_{3w}}$$

Fig 9. External clock timing

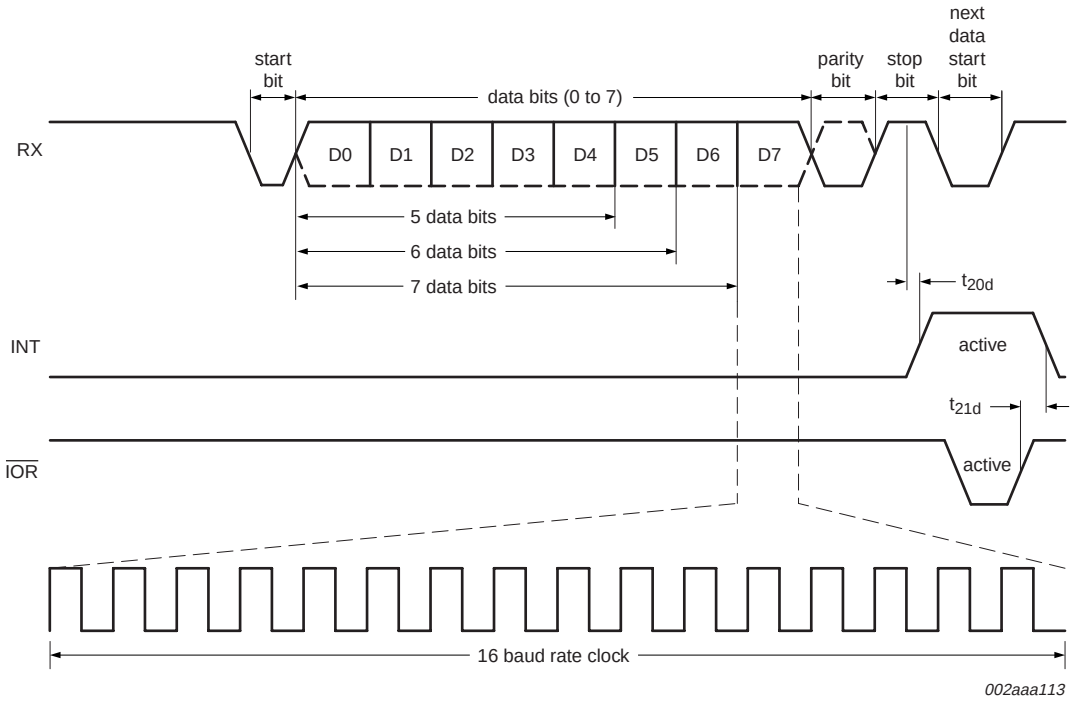

Fig 10. Receive timing

© Koninklijke Philips Electronics N.V. 2005. All rights reserved.

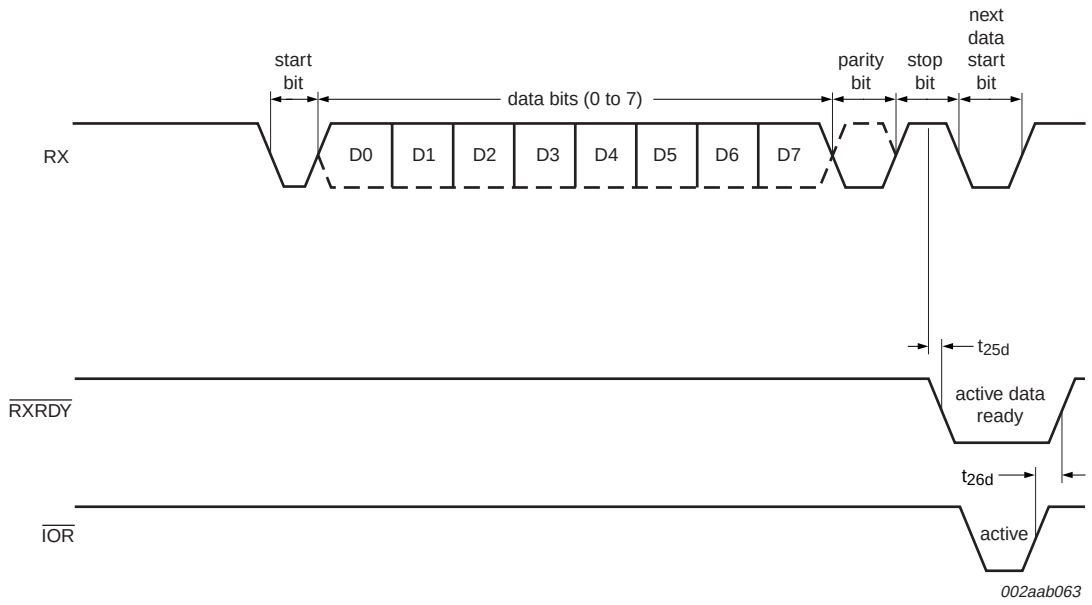

Fig 11. Receive ready timing in non-FIFO mode

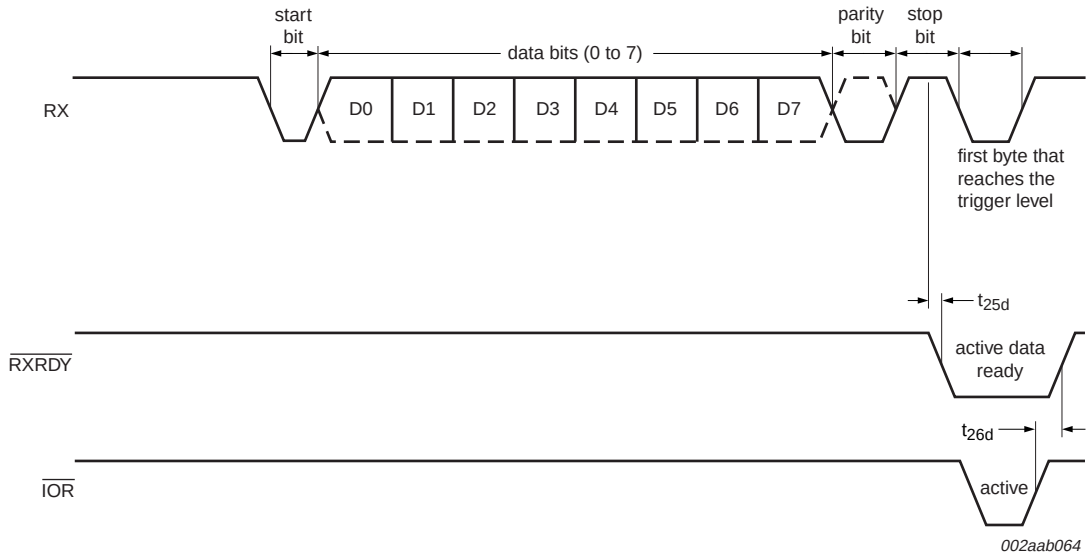

Fig 12. Receive ready timing in FIFO mode

© Koninklijke Philips Electronics N.V. 2005. All rights reserved.

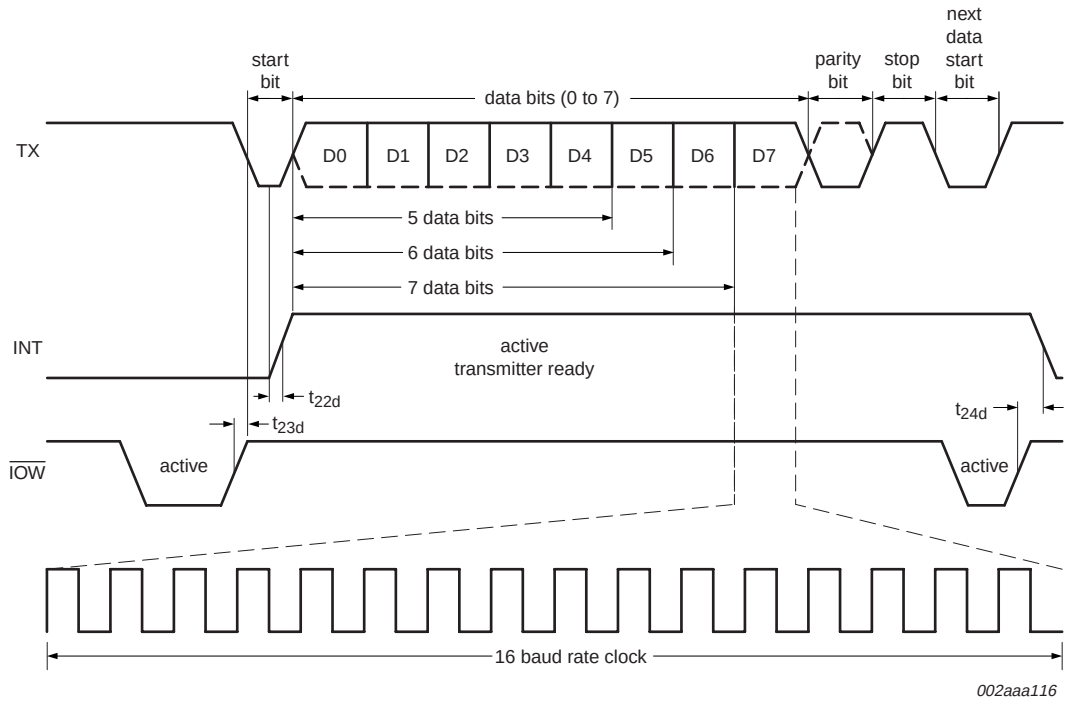

Fig 13. Transmit timing

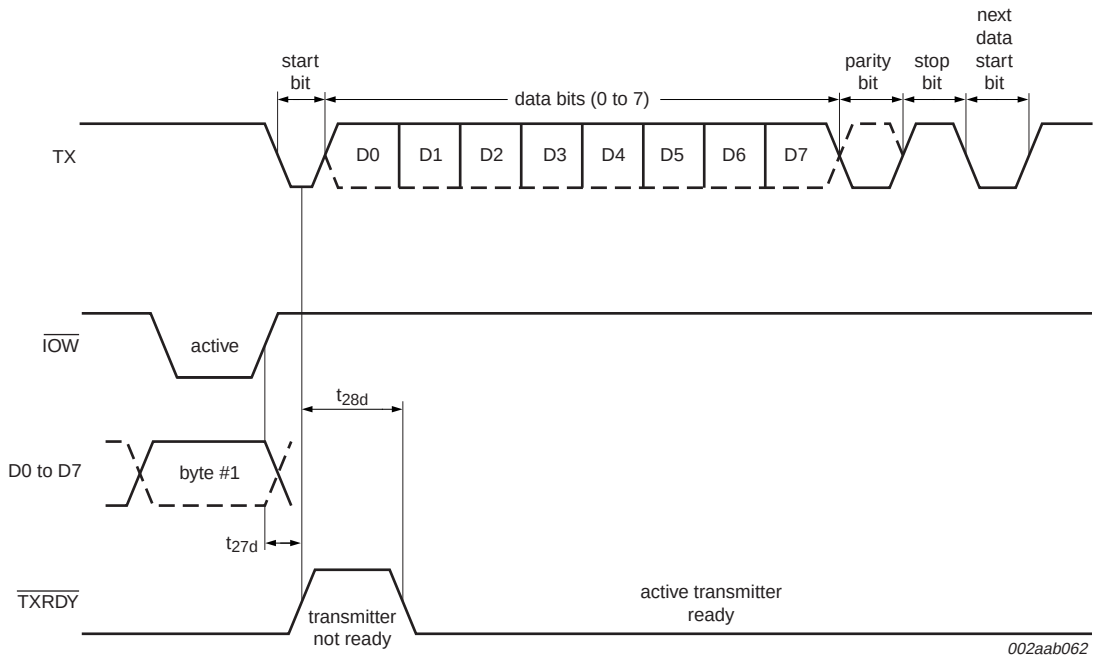

Fig 14. Transmit ready timing in non-FIFO mode

© Koninklijke Philips Electronics N.V. 2005. All rights reserved.

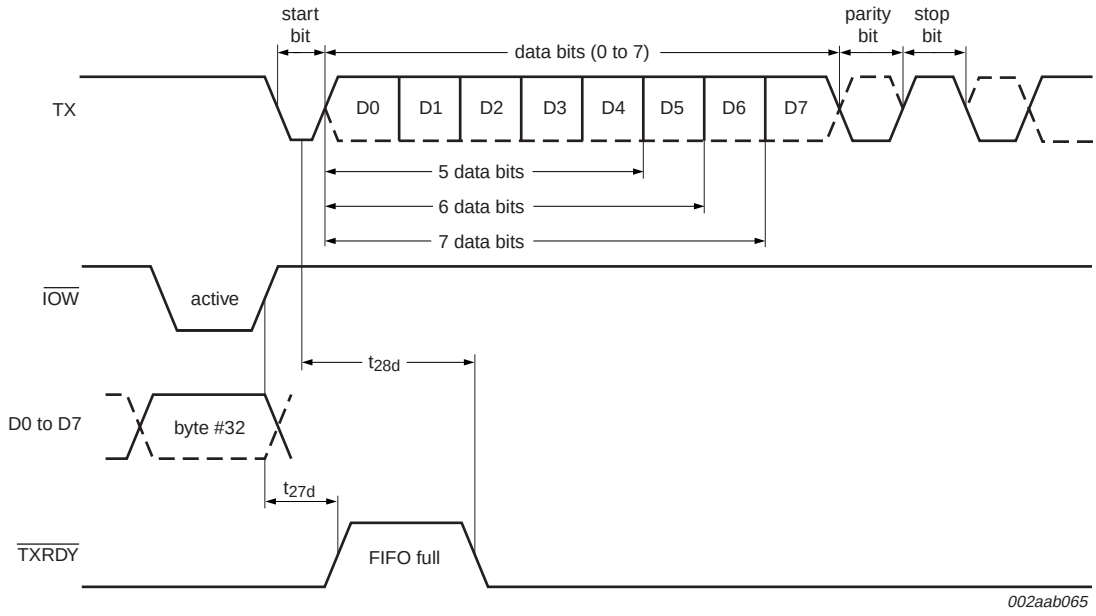

Fig 15. Transmit ready timing in FIFO mode (DMA mode '1')

© Koninklijke Philips Electronics N.V. 2005. All rights reserved.

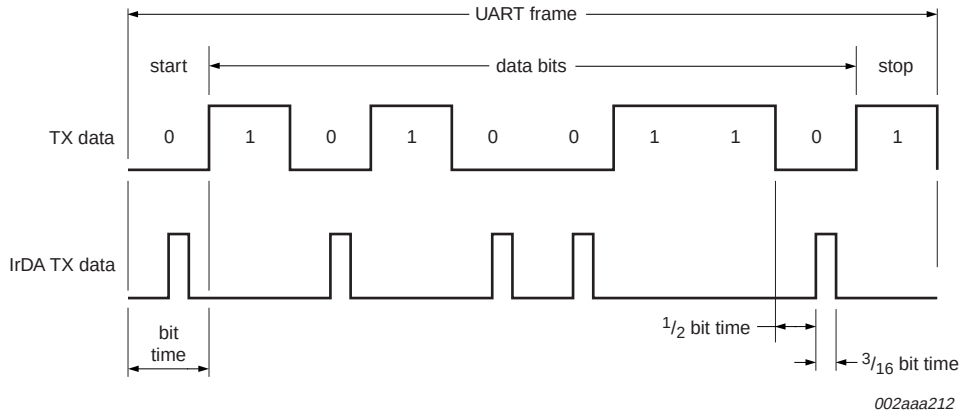

Fig 16. Infrared transmit timing

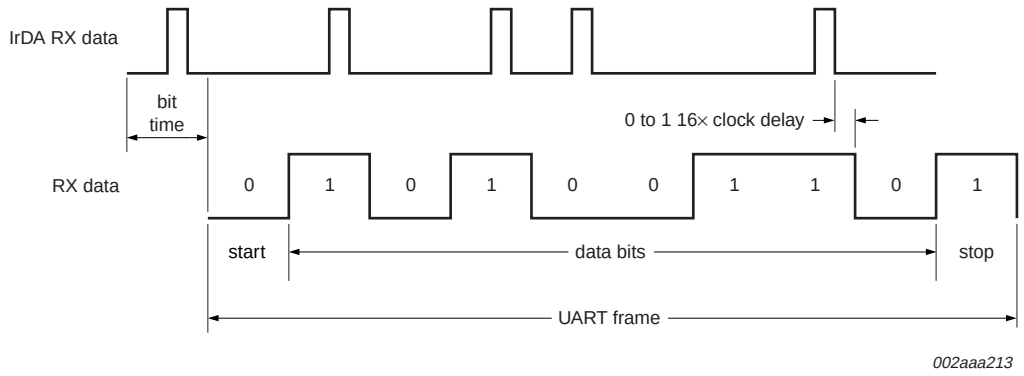

Fig 17. Infrared receive timing

© Koninklijke Philips Electronics N.V. 2005. All rights reserved.

11. Package outline

LQFP48: plastic low profile quad flat package; 48 leads; body 7 x 7 x 1.4 mm **SOT313-2**

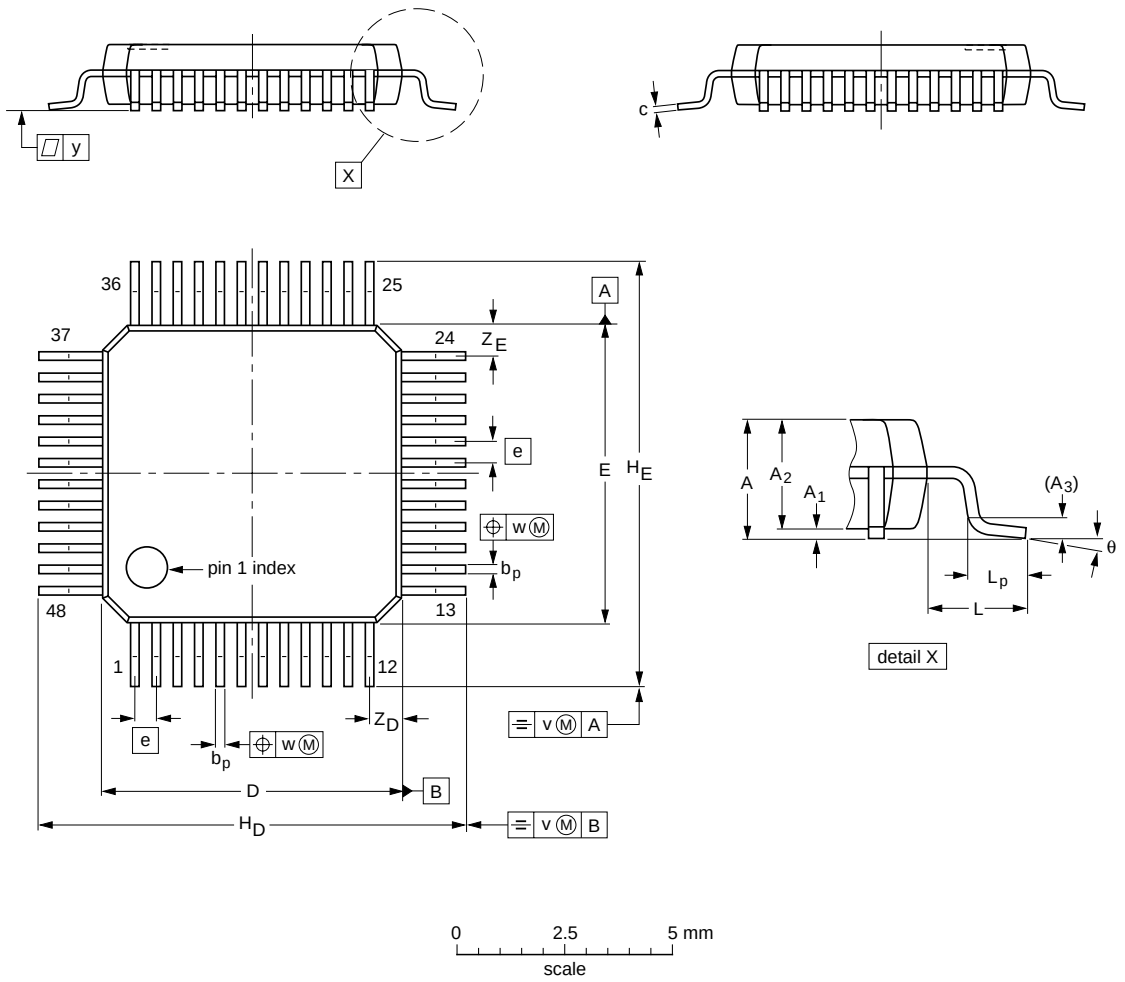

DIMENSIONS (mm are the original dimensions)

UNIT	A max.	A_1	A_2	A_3	b_p	c	D(1)	E(1)	e	H_D	H_E	L	L_p	v	w	y	Z_D(1)	Z_E(1)	θ
mm	1.6	0.20 0.05	1.45 1.35	0.25	0.27 0.17	0.18 0.12	7.1 6.9	7.1 6.9	0.5	9.15 8.85	9.15 8.85	1	0.75 0.45	0.2	0.12	0.1	0.95 0.55	0.95 0.55	7° 0°

Note

1. Plastic or metal protrusions of 0.25 mm maximum per side are not included.

OUTLINE VERSION	REFERENCES				EUROPEAN PROJECTION	ISSUE DATE
	IEC	JEDEC	JEITA			
SOT313-2	136E05	MS-026				~~00-01-19~~ 03-02-25

Fig 18. Package outline SOT313-2 (LQFP48)

© Koninklijke Philips Electronics N.V. 2005. All rights reserved.

HVQFN32: plastic thermal enhanced very thin quad flat package; no leads; 32 terminals; body 5 x 5 x 0.85 mm **SOT617-1**

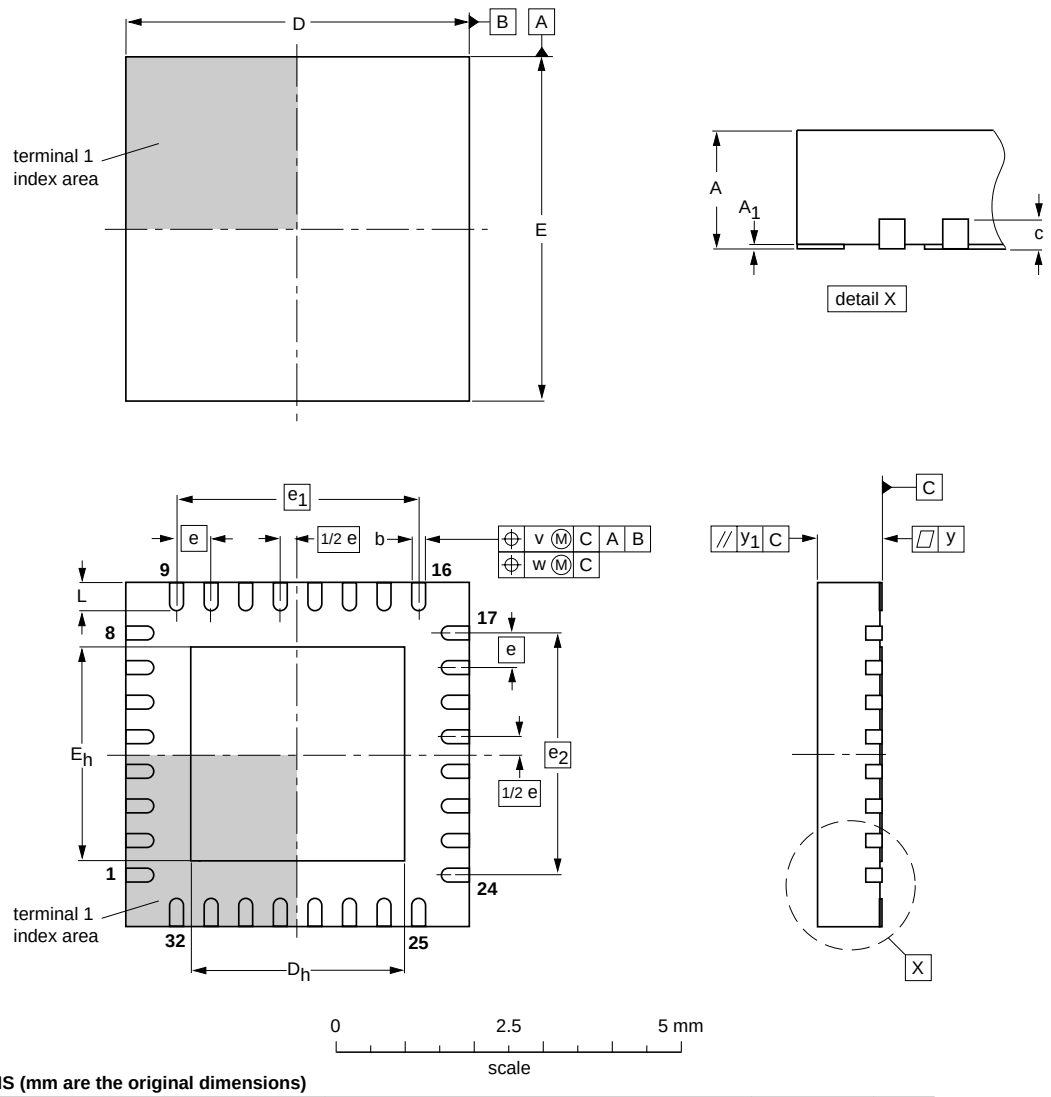

DIMENSIONS (mm are the original dimensions)

UNIT	A(1) max.	A_1	b	c	D(1)	D_h	E(1)	E_h	e	e_1	e_2	L	v	w	y	y_1
mm	1	0.05 0.00	0.30 0.18	0.2	5.1 4.9	3.25 2.95	5.1 4.9	3.25 2.95	0.5	3.5	3.5	0.5 0.3	0.1	0.05	0.05	0.1

Note

1. Plastic or metal protrusions of 0.075 mm maximum per side are not included.

OUTLINE VERSION	REFERENCES				EUROPEAN PROJECTION	ISSUE DATE
	IEC	JEDEC	JEITA			
SOT617-1	- - -	MO-220	- - -			~~01-08-08~~ 02-10-18

Fig 19. Package outline SOT617-1 (HVQFN32)

© Koninklijke Philips Electronics N.V. 2005. All rights reserved.

12. Soldering

12.1 Introduction to soldering surface mount packages

This text gives a very brief insight to a complex technology. A more in-depth account of soldering ICs can be found in our *Data Handbook IC26; Integrated Circuit Packages* (document order number 9398 652 90011).

There is no soldering method that is ideal for all surface mount IC packages. Wave soldering can still be used for certain surface mount ICs, but it is not suitable for fine pitch SMDs. In these situations reflow soldering is recommended.

12.2 Reflow soldering

Reflow soldering requires solder paste (a suspension of fine solder particles, flux and binding agent) to be applied to the printed-circuit board by screen printing, stencilling or pressure-syringe dispensing before package placement. Driven by legislation and environmental forces the worldwide use of lead-free solder pastes is increasing.

Several methods exist for reflowing; for example, convection or convection/infrared heating in a conveyor type oven. Throughput times (preheating, soldering and cooling) vary between 100 seconds and 200 seconds depending on heating method.

Typical reflow peak temperatures range from 215 °C to 270 °C depending on solder paste material. The top-surface temperature of the packages should preferably be kept:

- below 225 °C (SnPb process) or below 245 °C (Pb-free process)
  - for all BGA, HTSSON..T and SSOP..T packages
  - for packages with a thickness ≥ 2.5 mm
  - for packages with a thickness < 2.5 mm and a volume ≥ 350 mm^3 so called thick/large packages.
- below 240 °C (SnPb process) or below 260 °C (Pb-free process) for packages with a thickness < 2.5 mm and a volume < 350 mm^3 so called small/thin packages.

Moisture sensitivity precautions, as indicated on packing, must be respected at all times.

12.3 Wave soldering

Conventional single wave soldering is not recommended for surface mount devices (SMDs) or printed-circuit boards with a high component density, as solder bridging and non-wetting can present major problems.

To overcome these problems the double-wave soldering method was specifically developed.

If wave soldering is used the following conditions must be observed for optimal results:

- Use a double-wave soldering method comprising a turbulent wave with high upward pressure followed by a smooth laminar wave.
- For packages with leads on two sides and a pitch (e):
  - larger than or equal to 1.27 mm, the footprint longitudinal axis is **preferred** to be parallel to the transport direction of the printed-circuit board;

© Koninklijke Philips Electronics N.V. 2005. All rights reserved.

– smaller than 1.27 mm, the footprint longitudinal axis **must** be parallel to the transport direction of the printed-circuit board.

The footprint must incorporate solder thieves at the downstream end.

- For packages with leads on four sides, the footprint must be placed at a 45° angle to the transport direction of the printed-circuit board. The footprint must incorporate solder thieves downstream and at the side corners.

During placement and before soldering, the package must be fixed with a droplet of adhesive. The adhesive can be applied by screen printing, pin transfer or syringe dispensing. The package can be soldered after the adhesive is cured.

Typical dwell time of the leads in the wave ranges from 3 seconds to 4 seconds at 250 °C or 265 °C, depending on solder material applied, SnPb or Pb-free respectively.

A mildly-activated flux will eliminate the need for removal of corrosive residues in most applications.

12.4 Manual soldering

Fix the component by first soldering two diagonally-opposite end leads. Use a low voltage (24 V or less) soldering iron applied to the flat part of the lead. Contact time must be limited to 10 seconds at up to 300 °C.

When using a dedicated tool, all other leads can be soldered in one operation within 2 seconds to 5 seconds between 270 °C and 320 °C.

12.5 Package related soldering information

Table 30: Suitability of surface mount IC packages for wave and reflow soldering methods

Package [1]	Soldering method	
	Wave	Reflow [2]
BGA, HTSSON..T [3], LBGA, LFBGA, SQFP, SSOP..T [3], TFBGA, VFBGA, XSON	not suitable	suitable
DHVQFN, HBCC, HBGA, HLQFP, HSO, HSOP, HSQFP, HSSON, HTQFP, HTSSOP, HVQFN, HVSON, SMS	not suitable [4]	suitable
PLCC [5], SO, SOJ	suitable	suitable
LQFP, QFP, TQFP	not recommended [5] [6]	suitable
SSOP, TSSOP, VSO, VSSOP	not recommended [7]	suitable
CWQCCN..L [8], PMFP [9], WQCCN..L [8]	not suitable	not suitable

[1] For more detailed information on the BGA packages refer to the *(LF)BGA Application Note* (AN01026); order a copy from your Philips Semiconductors sales office.

[2] All surface mount (SMD) packages are moisture sensitive. Depending upon the moisture content, the maximum temperature (with respect to time) and body size of the package, there is a risk that internal or external package cracks may occur due to vaporization of the moisture in them (the so called popcorn effect). For details, refer to the Drypack information in the *Data Handbook IC26; Integrated Circuit Packages; Section: Packing Methods*.

[3] These transparent plastic packages are extremely sensitive to reflow soldering conditions and must on no account be processed through more than one soldering cycle or subjected to infrared reflow soldering with peak temperature exceeding 217 °C ± 10 °C measured in the atmosphere of the reflow oven. The package body peak temperature must be kept as low as possible.

© Koninklijke Philips Electronics N.V. 2005. All rights reserved.

[4] These packages are not suitable for wave soldering. On versions with the heatsink on the bottom side, the solder cannot penetrate between the printed-circuit board and the heatsink. On versions with the heatsink on the top side, the solder might be deposited on the heatsink surface.

[5] If wave soldering is considered, then the package must be placed at a 45° angle to the solder wave direction. The package footprint must incorporate solder thieves downstream and at the side corners.

[6] Wave soldering is suitable for LQFP, QFP and TQFP packages with a pitch (e) larger than 0.8 mm; it is definitely not suitable for packages with a pitch (e) equal to or smaller than 0.65 mm.

[7] Wave soldering is suitable for SSOP, TSSOP, VSO and VSSOP packages with a pitch (e) equal to or larger than 0.65 mm; it is definitely not suitable for packages with a pitch (e) equal to or smaller than 0.5 mm.

[8] Image sensor packages in principle should not be soldered. They are mounted in sockets or delivered pre-mounted on flex foil. However, the image sensor package can be mounted by the client on a flex foil by using a hot bar soldering process. The appropriate soldering profile can be provided on request.

[9] Hot bar soldering or manual soldering is suitable for PMFP packages.

13. Abbreviations

Table 31: Abbreviations

Acronym	Description
FIFO	First In, First Out
UART	Universal Asynchronous Receiver/Transmitter
CPU	Central Processing Unit
ISDN	Integrated Service Digital Network
DMA	Direct Memory Access

© Koninklijke Philips Electronics N.V. 2005. All rights reserved.

14. Revision history

Table 32: Revision history

Document ID	Release date	Data sheet status	Change notice	Doc. number	Supersedes
SC16C652B_4	20050901	Product data sheet	-	-	SC16C652B-03
Modifications:	• The format of this data sheet has be redesigned to comply with the new presentation and information standard of Philips Semiconductors. • Table 4 “Internal registers decoding” on page 8, Table note 3: changed “BF(HEX)” to “BFh” • Section 6.8 “Programmable baud rate generator” on page 11, 3rd paragraph: changed from “... from 1 to 2^{16} – 1.” to “... from 1 to (2^{16} – 1).” • Table 6 on page 12: added “(bit/s)” to first column heading • Add new Section 6.11 “Sleep mode” on page 14 • Table 9 “SC16C652B internal registers” on page 15: removed shading, added (new) Table note 2 and references to it in previously shaded table cells • Table 18 “LCR[2] stop bit length” on page 21: added “(bits)” to column heading “Word length” • Table 19 “LCR[1:0] word length” on page 21: added “(bits)” to column heading “Word length” • Table 28 “Static characteristics” on page 27: – added row $I_{CCsleep}$ and new Table note 2 – Table note 1: changed “x_2” to “XTAL2” • Table 29 “Dynamic characteristics” on page 28: – changed symbol “t_{3w}” to “f_{XTAL}” and added (new) Table note 2 – presentation of values for t_{20d}, t_{23d}, t_{25d}, t_{28d} changed: “T_{RCLK}” appended to multiplier; Unit changed from “R_{clk}” to “s”; Table note 3 added and referenced at these 4 timing measurements – Unit “R_{clk}” deleted from row for symbol “N” (N is a number) • added equation to Figure 9 “External clock timing” on page 31 • signal $\overline{TXRDY}$ modified in Figure 14 “Transmit ready timing in non-FIFO mode” on page 33 • Figure 15 “Transmit ready timing in FIFO mode (DMA mode ‘1’)” on page 34: changed “BYTE #1” to “byte #32” • added Section 13 “Abbreviations”				
SC16C652B-03	20041210	Product data	-	9397 750 14452	SC16C652B-02
Modifications:	• There is no modification to the data sheet. However, reader is advised to refer to *AN10333 (Rev. 01) “SC16CXXXB baud rate deviation tolerance” (9397 750 14411)* that was released together with this revision.				
SC16C652B-02	20040617	Product data	-	9397 750 13123	SC16C652B-01
SC16C652B-01	20040326	Product data	-	9397 750 11972	-

© Koninklijke Philips Electronics N.V. 2005. All rights reserved.

15. Data sheet status

Level	Data sheet status [1]	Product status [2] [3]	Definition
I	Objective data	Development	This data sheet contains data from the objective specification for product development. Philips Semiconductors reserves the right to change the specification in any manner without notice.
II	Preliminary data	Qualification	This data sheet contains data from the preliminary specification. Supplementary data will be published at a later date. Philips Semiconductors reserves the right to change the specification without notice, in order to improve the design and supply the best possible product.
III	Product data	Production	This data sheet contains data from the product specification. Philips Semiconductors reserves the right to make changes at any time in order to improve the design, manufacturing and supply. Relevant changes will be communicated via a Customer Product/Process Change Notification (CPCN).

[1] Please consult the most recently issued data sheet before initiating or completing a design.

[2] The product status of the device(s) described in this data sheet may have changed since this data sheet was published. The latest information is available on the Internet at URL http://www.semiconductors.philips.com.

[3] For data sheets describing multiple type numbers, the highest-level product status determines the data sheet status.

16. Definitions

Short-form specification — The data in a short-form specification is extracted from a full data sheet with the same type number and title. For detailed information see the relevant data sheet or data handbook.

Limiting values definition — Limiting values given are in accordance with the Absolute Maximum Rating System (IEC 60134). Stress above one or more of the limiting values may cause permanent damage to the device. These are stress ratings only and operation of the device at these or at any other conditions above those given in the Characteristics sections of the specification is not implied. Exposure to limiting values for extended periods may affect device reliability.

Application information — Applications that are described herein for any of these products are for illustrative purposes only. Philips Semiconductors make no representation or warranty that such applications will be suitable for the specified use without further testing or modification.

17. Disclaimers

Life support — These products are not designed for use in life support appliances, devices, or systems where malfunction of these products can reasonably be expected to result in personal injury. Philips Semiconductors customers using or selling these products for use in such applications do so at their own risk and agree to fully indemnify Philips Semiconductors for any damages resulting from such application.

Right to make changes — Philips Semiconductors reserves the right to make changes in the products - including circuits, standard cells, and/or software - described or contained herein in order to improve design and/or performance. When the product is in full production (status 'Production'), relevant changes will be communicated via a Customer Product/Process Change Notification (CPCN). Philips Semiconductors assumes no responsibility or liability for the use of any of these products, conveys no license or title under any patent, copyright, or mask work right to these products, and makes no representations or warranties that these products are free from patent, copyright, or mask work right infringement, unless otherwise specified.

18. Trademarks

Notice — All referenced brands, product names, service names and trademarks are the property of their respective owners.

19. Contact information

For additional information, please visit: **http://www.semiconductors.philips.com**

For sales office addresses, send an email to: **sales.addresses@www.semiconductors.philips.com**

© Koninklijke Philips Electronics N.V. 2005. All rights reserved.

20. Contents

1 General description . . . 1
2 Features . . . 1
3 Ordering information . . . 2
4 Block diagram . . . 3
5 Pinning information . . . 4
5.1 Pinning . . . 4
5.2 Pin description . . . 5
6 Functional description . . . 7
6.1 UART A-B functions . . . 8
6.2 Internal registers . . . 8
6.3 FIFO operation . . . 9
6.4 Hardware flow control . . . 9
6.5 Software flow control . . . 9
6.6 Special feature software flow control . . . 10
6.7 Hardware/software and time-out interrupts . . . 10
6.8 Programmable baud rate generator . . . 11
6.9 DMA operation . . . 12
6.10 Loop-back mode . . . 12
6.11 Sleep mode . . . 14
7 Register descriptions . . . 15
7.1 Transmit (THR) and Receive (RHR) Holding Registers . . . 16
7.2 Interrupt Enable Register (IER) . . . 16
7.2.1 IER versus Transmit/Receive FIFO interrupt mode operation . . . 17
7.2.2 IER versus Receive/Transmit FIFO polled mode operation . . . 17
7.3 FIFO Control Register (FCR) . . . 18
7.3.1 DMA mode . . . 18
7.3.1.1 Mode 0 (FCR bit 3 = 0) . . . 18
7.3.1.2 Mode 1 (FCR bit 3 = 1) . . . 18
7.3.2 FIFO mode . . . 18
7.4 Interrupt Status Register (ISR) . . . 20
7.5 Line Control Register (LCR) . . . 21
7.6 Modem Control Register (MCR) . . . 22
7.7 Line Status Register (LSR) . . . 23
7.8 Modem Status Register (MSR) . . . 24
7.9 Scratchpad Register (SPR) . . . 24
7.10 Enhanced Feature Register (EFR) . . . 25
7.11 SC16C652B external reset condition . . . 26
8 Limiting values . . . 27
9 Static characteristics . . . 27
10 Dynamic characteristics . . . 28
10.1 Timing diagrams . . . 29
11 Package outline . . . 36
12 Soldering . . . 38
12.1 Introduction to soldering surface mount packages . . . 38
12.2 Reflow soldering . . . 38
12.3 Wave soldering . . . 38
12.4 Manual soldering . . . 39
12.5 Package related soldering information . . . 39
13 Abbreviations . . . 40
14 Revision history . . . 41
15 Data sheet status . . . 42
16 Definitions . . . 42
17 Disclaimers . . . 42
18 Trademarks . . . 42
19 Contact information . . . 42

© Koninklijke Philips Electronics N.V. 2005

All rights are reserved. Reproduction in whole or in part is prohibited without the prior written consent of the copyright owner. The information presented in this document does not form part of any quotation or contract, is believed to be accurate and reliable and may be changed without notice. No liability will be accepted by the publisher for any consequence of its use. Publication thereof does not convey nor imply any license under patent- or other industrial or intellectual property rights.

Date of release: 1 September 2005
Document number: SC16C652B_4

Published in The Netherlands