DATA SHEET

NEC

Solid State Relay
OCMOS FET

PS7122A-1C,PS7122AL-1C

8-PIN DIP, 250 V BREAK DOWN VOLTAGE, TRANSFER TYPE 2-ch Optical Coupled MOS FET

DESCRIPTION

The PS7122A-1C and PS7122AL-1C are transfer type solid state relays containing normally open (N.O.) contact and normally close (N.C.) contact on the output side.

They are suitable for analog signal control because of their low offset and high linearity.

The PS7122AL-1C has a surface mount type lead.

FEATURES

- 2 channel type (1 a + 1 b output)
- ★ Low LED operating current (I_F = 2 mA)
- Designed for AC/DC switching line changer
- Small package (8-pin DIP)
- Low offset voltage
- PS7122AL-1C: Surface mount type

APPLICATIONS

- Exchange equipment
- Measurement equipment
- FA/OA equipment

The information in this document is subject to change without notice. Before using this document, please confirm that this is the latest version.
Not all devices/types available in every country. Please check with local NEC representative for availability and additional information.

Document No. P13383EJ4V0DS00 (4th edition)
Date Published October 1999 NS CP(K)
Printed in Japan

The mark ★ shows major revised points.

© NEC Corporation 1997, 1999

PACKAGE DIMENSIONS (in millimeters)

PS7122A-1C

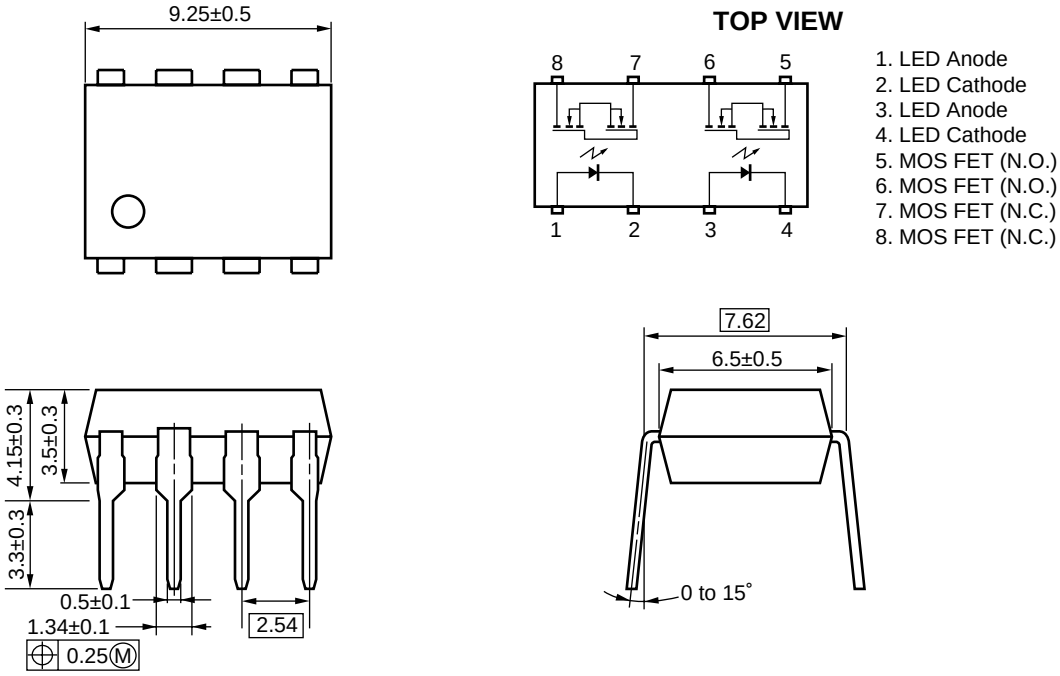

PS7122AL-1C

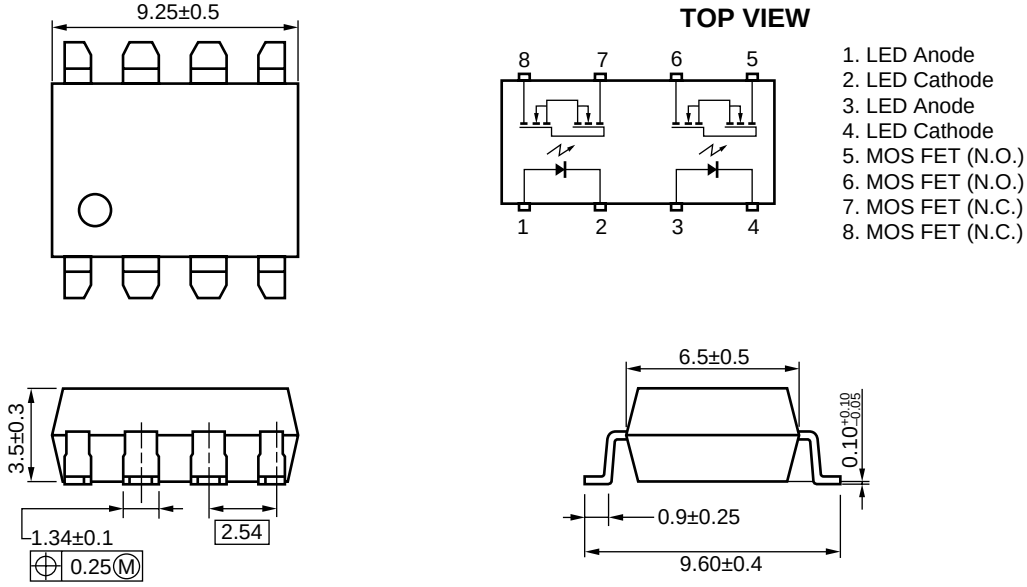

★ ORDERING INFORMATION

Part Number	Package	Packing Style	Application Part Number*1
PS7122A-1C	8-pin DIP	Magazine case 50 pcs	PS7122A-1C
PS7122AL-1C			PS7122AL-1C
PS7122AL-1C-E3		Embossed Tape 1 000 pcs/reel	
PS7122AL-1C-E4			

***1** For the application of the Safety Standard, following part number should be used.

ABSOLUTE MAXIMUM RATINGS (T_A = 25 °C, unless otherwise specified)

Parameter		Symbol	Ratings	Unit
Diode	Forward Current (DC)	I_F	50	mA
	Reverse Voltage	V_R	5.0	V
	Power Dissipation	P_D	50	mW/ch
	Peak Forward Current*1	I_{FP}	1	A
MOS FET	Break Down Voltage	V_L	250	V
	Continuous Load Current	I_L	200	mA
★	Pulse Load Current*2 (AC/DC Connection)	I_{LP}	400	mA
	Power Dissipation	P_D	375	mW/ch
Isolation Voltage*3		BV	1 500	Vr.m.s.
Total Power Dissipation		P_T	850	mW
Operating Ambient Temperature		T_A	–40 to +80	°C
Storage Temperature		T_{stg}	–40 to +100	°C

***1** PW = 100 μs, Duty Cycle = 1 %

***2** PW = 100 ms, 1 shot

***3** AC voltage for 1 minute at T_A = 25 °C, RH = 60 % between input and output

RECOMMENDED OPERATING CONDITIONS (T_A = 25 °C)

Parameter	Symbol	MIN.	TYP.	MAX.	Unit
LED Operating Current	I_F	2	10	20	mA
LED Off Voltage	V_F	0		0.5	V

★ ELECTRICAL CHARACTERISTICS (T_A = 25 ºC)

Parameter		Symbol	Conditions	MIN.	TYP.	MAX.	Unit
Diode	Forward Voltage	V_F	I_F = 10 mA		1.2	1.4	V
	Reverse Current	I_R	V_R = 5 V			5.0	μA
MOS FET	Off-state Leakage Current	I_{Loff}	N.O.: I_F = 0 mA, V_D = 250 V		0.03	1.0	μA
			N.C.: I_F = 10 mA, V_D = 250 V				
	Output Capacitance	C_{out}	N.O.: V_D = 0 V, f = 1 MHz		120		pF/ch
			N.C.: I_F = 10 mA, V_D = 0 V, f = 1 MHz		340		
Coupled	LED On-state Current	I_{Fon}	N.O.: I_L = 200 mA			2.0	mA
	LED Off-state Current	I_{Foff}	N.C.: I_L = 200 mA			2.0	mA
	On-state Resistance	R_{on1}	N.O.: I_F = 10 mA, I_L = 10 mA		4.5	8.0	Ω
			N.C.: I_F = 0 mA, I_L = 10 mA				
		R_{on2}	N.O.: I_F = 10 mA, I_L = 200 mA, t ≤ 10 ms				
			N.C.: I_F = 0 mA, I_L = 200 mA, t ≤ 10 ms				
	Turn-on Time *1	$t_{on\ (N.O.)}$	I_F = 10 mA, V_O = 5 V, PW ≥ 10 ms		0.5	1.5	ms
		$t_{on\ (N.C.)}$			0.04	0.2	
	Turn-off Time *1	$t_{off\ (N.O.)}$			0.04	0.2	
		$t_{off\ (N.C.)}$			0.5	1.5	
	Isolation Resistance	R_{I-O}	V_{I-O} = 1.0 kV_{DC}	10^9			Ω
	Isolation Capacitance	C_{I-O}	V = 0 V, f = 1 MHz		1.1		pF/ch

***1** Test Circuit for Switching Time

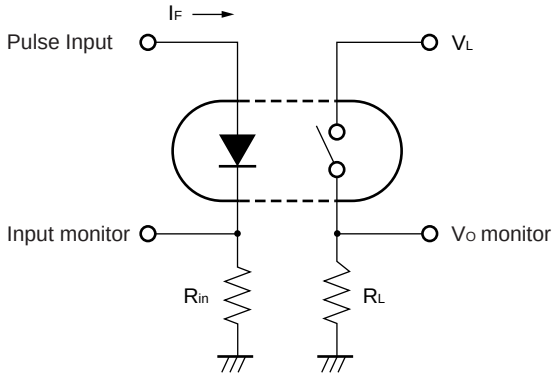

N.O. (between pin 5 and 6)

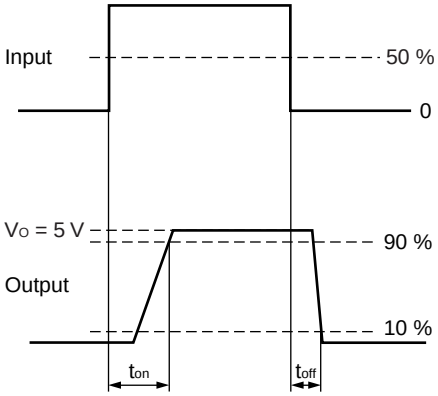

N.C. (between pin 7 and 8)

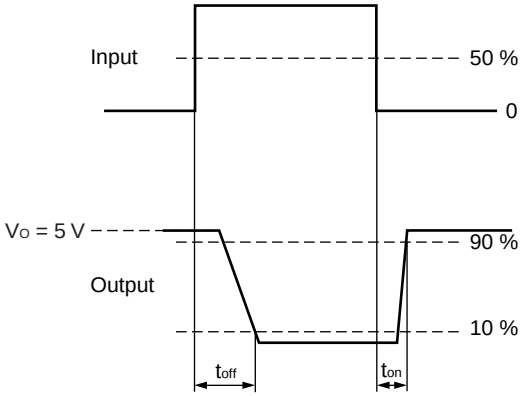

★ **TYPICAL CHARACTERISTICS (T_A = 25 °C, unless otherwise specified)**

MAXIMUM FORWARD CURRENT vs. AMBIENT TEMPERATURE

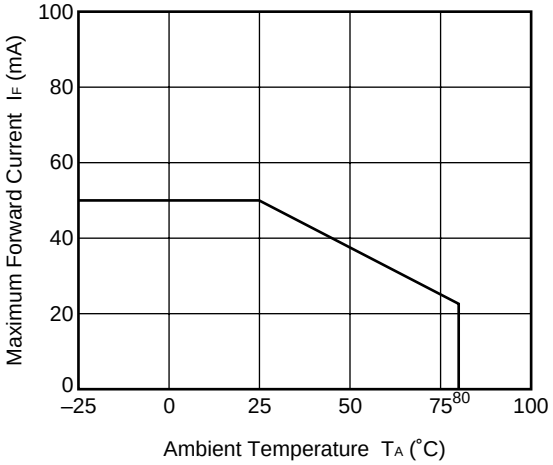

MAXIMUM LOAD CURRENT vs. AMBIENT TEMPERATURE

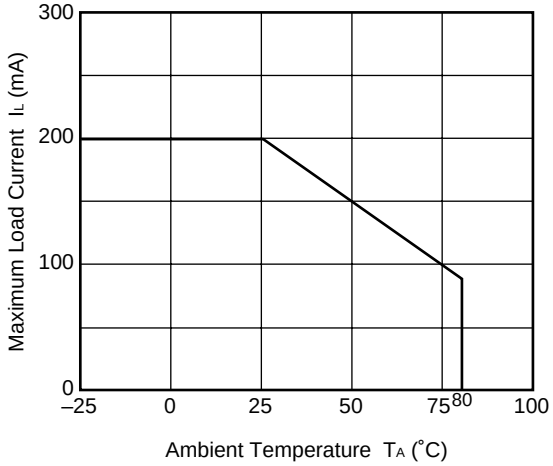

FORWARD VOLTAGE vs. AMBIENT TEMPERATURE

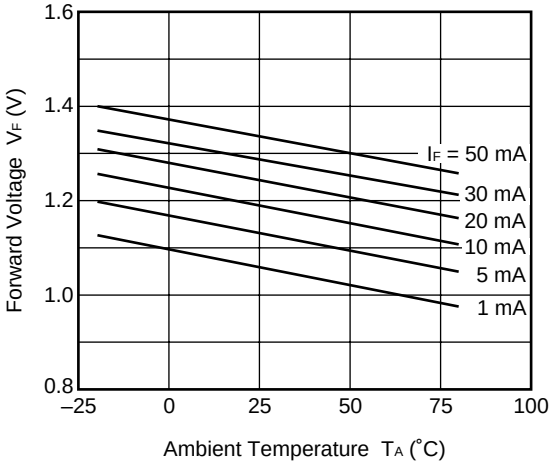

OUTPUT CAPACITANCE vs. APPLIED VOLTAGE

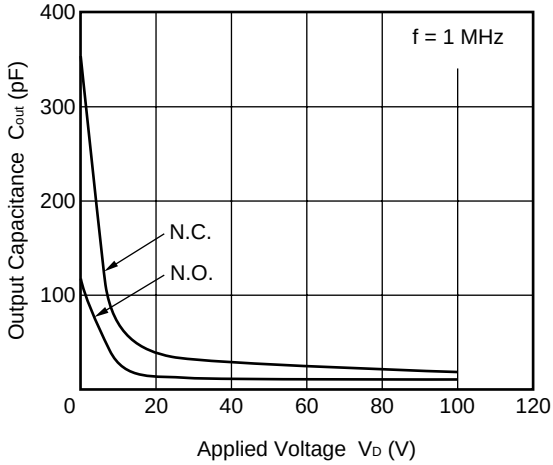

OFF-STATE LEAKAGE CURRENT vs. APPLIED VOLTAGE

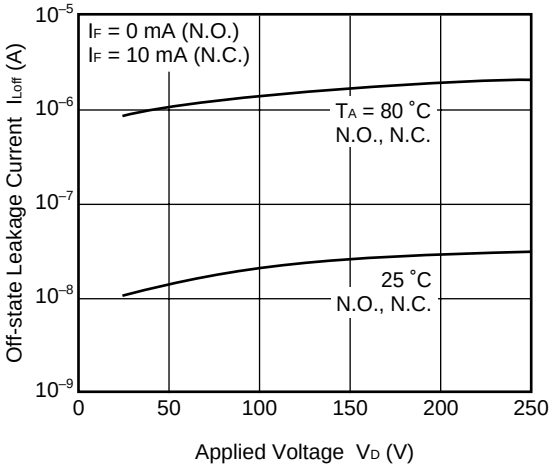

LOAD CURRENT vs. LOAD VOLTAGE

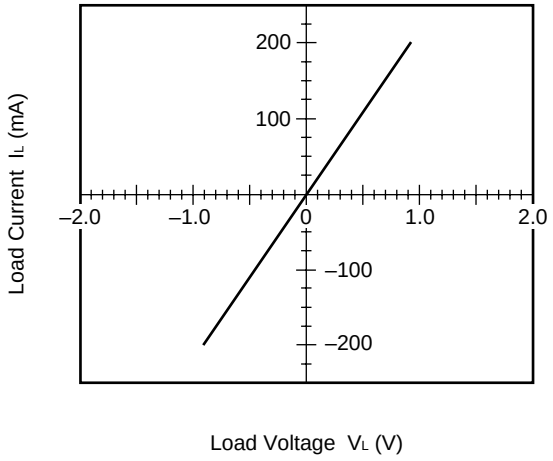

TURN-ON TIME vs. FORWARD CURRENT

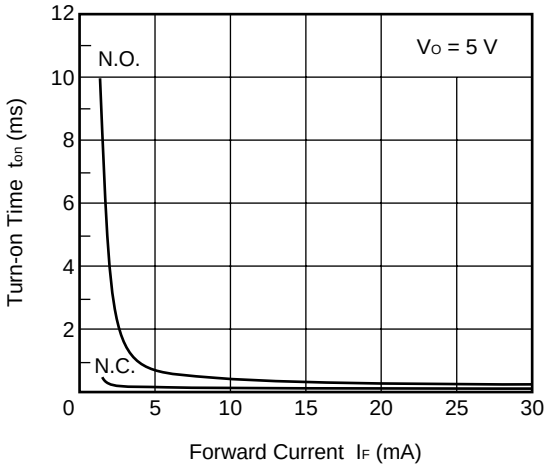

TURN-OFF TIME vs. FORWARD CURRENT

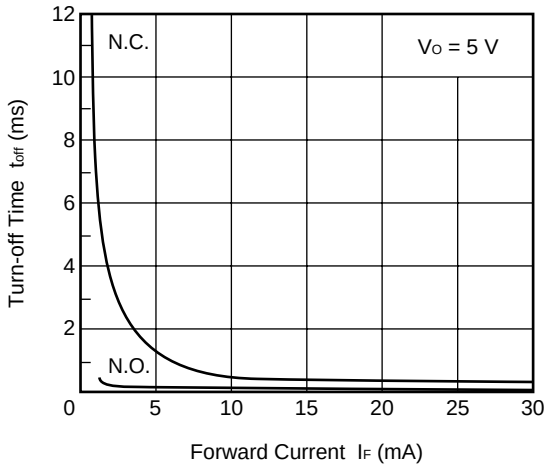

NORMALIZED TURN-ON TIME vs. AMBIENT TEMPERATURE

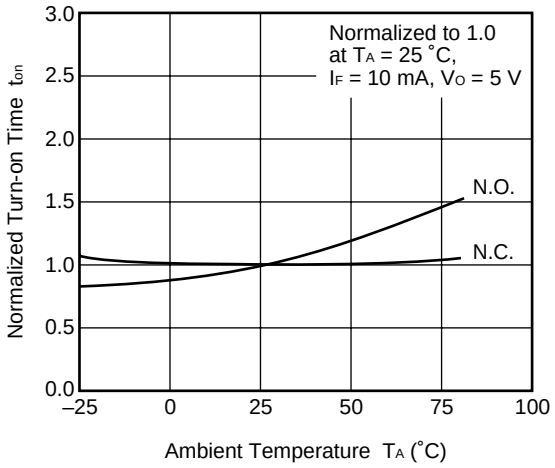

NORMALIZED TURN-OFF TIME vs. AMBIENT TEMPERATURE

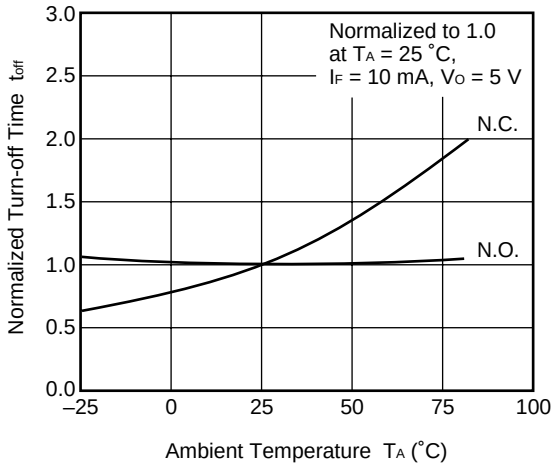

NORMALIZED ON-STATE RESISTANCE vs. AMBIENT TEMPERATURE

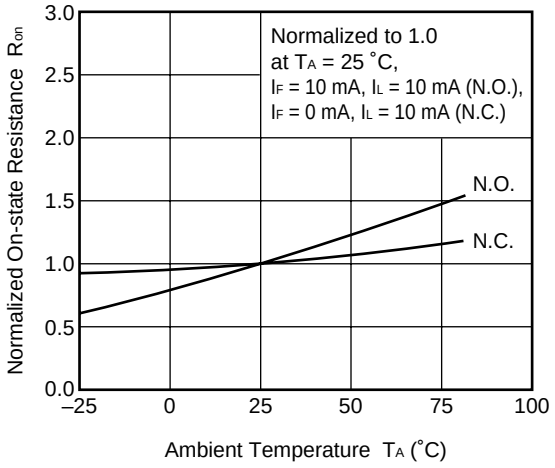

ON-STATE RESISTANCE (N.O.) DISTRIBUTION

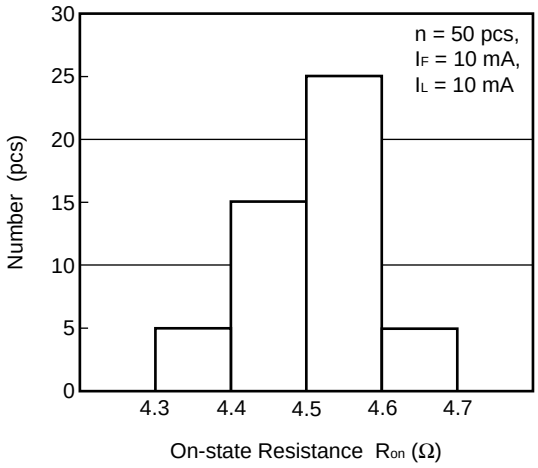

ON-STATE RESISTANCE (N.C.) DISTRIBUTION

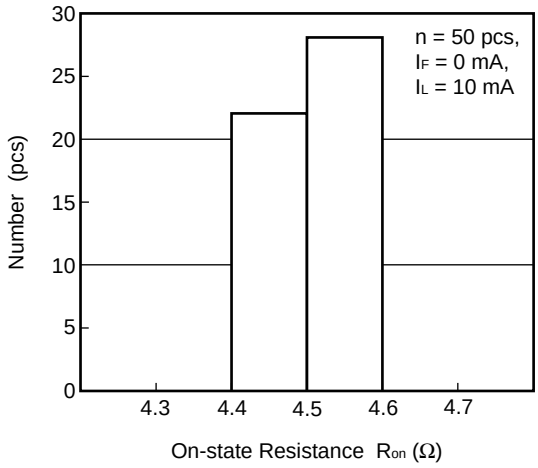

TURN-ON TIME (N.O.) DISTRIBUTION

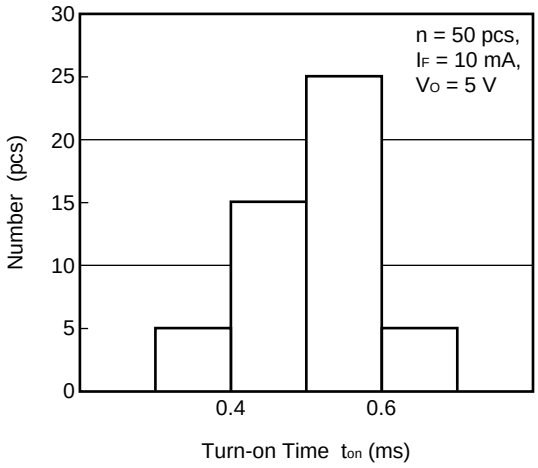

TURN-OFF TIME (N.O.) DISTRIBUTION

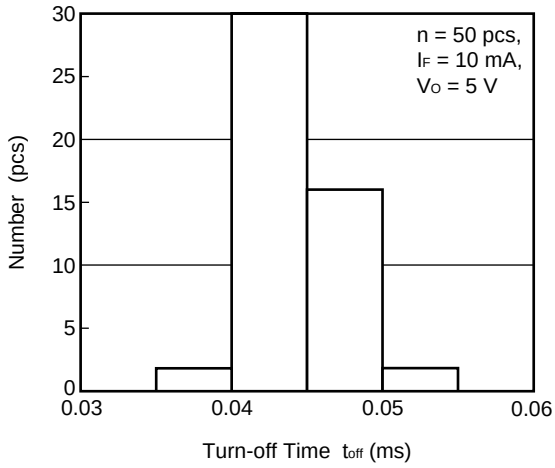

TURN-ON TIME (N.C.) DISTRIBUTION

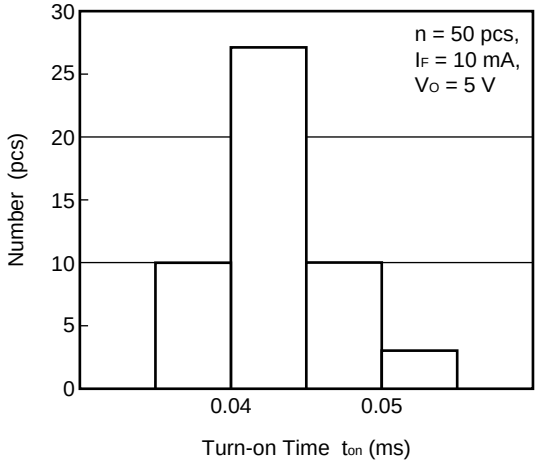

TURN-OFF TIME (N.C.) DISTRIBUTION

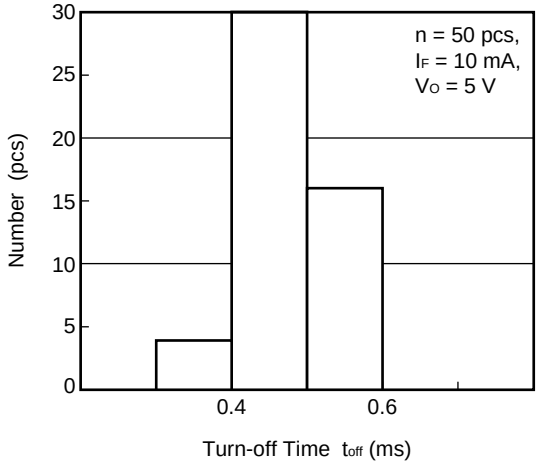

Remark The graphs indicate nominal characteristics.

★ **TAPING SPECIFICATIONS (in millimeters)**

Outline and Dimensions (Tape)

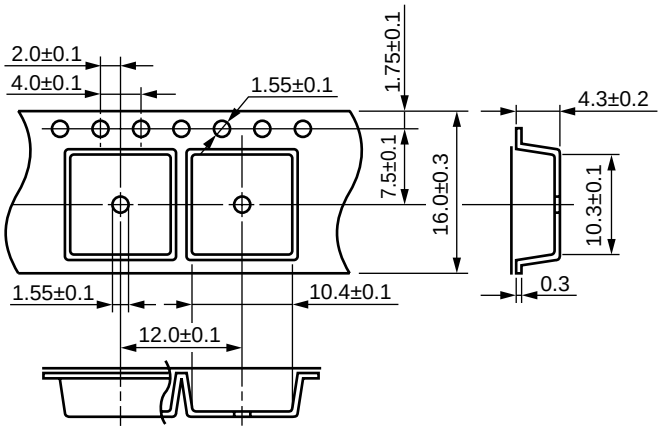

Tape Direction

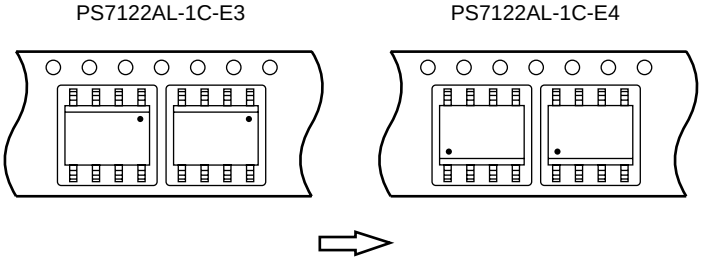

Outline and Dimensions (Reel)

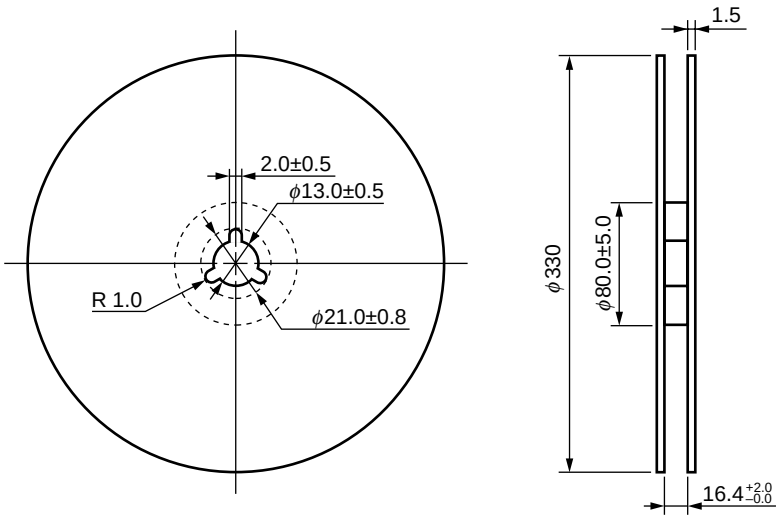

Packing: 1 000 pcs/reel

RECOMMENDED SOLDERING CONDITIONS

(1) Infrared reflow soldering

- Peak reflow temperature — 235 °C (package surface temperature)
- Time of temperature higher than 210 °C — 30 seconds or less
- Number of reflows — Two
- Flux — Rosin flux containing small amount of chlorine (The flux with a maximum chlorine content of 0.2 Wt % is recommended.)

★ Recommended Temperature Profile of Infrared Reflow

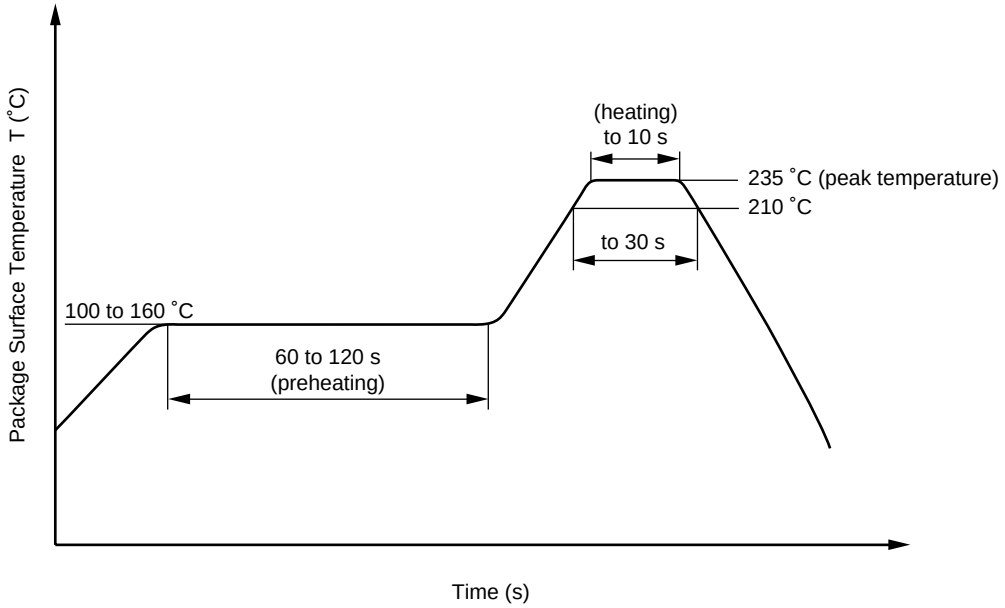

(2) Dip soldering

- Temperature — 260 °C or below (molten solder temperature)
- Time — 10 seconds or less
- Number of times — One
- Flux — Rosin flux containing small amount of chlorine (The flux with a maximum chlorine content of 0.2 Wt % is recommended.)

(3) Cautions

- Fluxes

  Avoid removing the residual flux with freon-based and chlorine-based cleaning solvent.

[MEMO]

CAUTION

Within this device there exists GaAs (Gallium Arsenide) material which is a harmful substance if ingested. Please do not under any circumstances break the hermetic seal.

- **The information in this document is subject to change without notice. Before using this document, please confirm that this is the latest version.**
- No part of this document may be copied or reproduced in any form or by any means without the prior written consent of NEC Corporation. NEC Corporation assumes no responsibility for any errors which may appear in this document.
- NEC Corporation does not assume any liability for infringement of patents, copyrights or other intellectual property rights of third parties by or arising from use of a device described herein or any other liability arising from use of such device. No license, either express, implied or otherwise, is granted under any patents, copyrights or other intellectual property rights of NEC Corporation or others.
- Descriptions of circuits, software, and other related information in this document are provided for illustrative purposes in semiconductor product operation and application examples. The incorporation of these circuits, software, and information in the design of the customer's equipment shall be done under the full responsibility of the customer. NEC Corporation assumes no responsibility for any losses incurred by the customer or third parties arising from the use of these circuits, software, and information.
- While NEC Corporation has been making continuous effort to enhance the reliability of its semiconductor devices, the possibility of defects cannot be eliminated entirely. To minimize risks of damage or injury to persons or property arising from a defect in an NEC semiconductor device, customers must incorporate sufficient safety measures in its design, such as redundancy, fire-containment, and anti-failure features.
- NEC devices are classified into the following three quality grades:
  "Standard", "Special", and "Specific". The Specific quality grade applies only to devices developed based on a customer designated "quality assurance program" for a specific application. The recommended applications of a device depend on its quality grade, as indicated below. Customers must check the quality grade of each device before using it in a particular application.
  - Standard: Computers, office equipment, communications equipment, test and measurement equipment, audio and visual equipment, home electronic appliances, machine tools, personal electronic equipment and industrial robots
  - Special: Transportation equipment (automobiles, trains, ships, etc.), traffic control systems, anti-disaster systems, anti-crime systems, safety equipment and medical equipment (not specifically designed for life support)
  - Specific: Aircraft, aerospace equipment, submersible repeaters, nuclear reactor control systems, life support systems or medical equipment for life support, etc.

  The quality grade of NEC devices is "Standard" unless otherwise specified in NEC's Data Sheets or Data Books. If customers intend to use NEC devices for applications other than those specified for Standard quality grade, they should contact an NEC sales representative in advance.

M7 98.8