Continental Device India Limited

An ISO/TS16949 and ISO 9001 Certified Company

PNP SILICON PLANAR EPITAXIAL TRANSISTORS

BC556, A, B, C
BC557, A, B, C
BC558, A, B, C
TO-92 Plastic Package

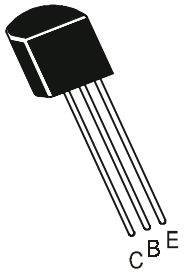

General Purpose Transistors

ABSOLUTE MAXIMUM RATINGS(Ta=25 deg C unless otherwise specified)

DESCRIPTION	SYMBOL		BC556	BC557	BC558	UNITS
Collector Emitter Voltage	V_{CEO}		65	45	30	V
Collector Emitter Voltage	V_{CES}		80	50	30	V
Collector Base Voltage	V_{CBO}		80	50	30	V
Emitter Base Voltage	V_{EBO}		5	5	5	V
Collector Current Continuous	I_C			100		mA
Peak	I_{CM}			200		mA
Base Current - Peak	I_{BM}			200		mA
Emitter Current - Peak	I_{EM}			200		mA
Collector Power Dissipation	P_{TA}			500		mW
Ta =25 deg C						
Operating And Storage Junction	T_j, T_{stg}			-55 to +150		ºC
Temperature Range						
THERMAL RESISTANCE						
Junction to ambient	$R_{th(j-a)}$			250		ºC/W

ELECTRICAL CHARACTERISTICS (Ta=25 deg C Unless Otherwise Specified)

DESCRIPTION	SYMBOL	TEST CONDITION	MIN	TYP	MAX	UNITS
Collector Emitter Voltage						
BC556	V_{CEO}	I_C=2mA,I_B=0	65			V
BC557			45			V
BC558			30			V

PNP SILICON PLANAR EPITAXIAL TRANSISTORS

BC556, A, B, C
BC557, A, B, C
BC558, A, B, C
TO-92 Plastic Package

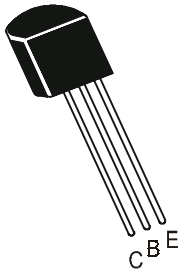

DESCRIPTION	SYMBOL	TEST CONDITION	MIN	TYP	MAX	UNITS
Collector Base Voltage						
BC556	V_{CBO}	I_C=100uA,I_E=0	80			V
BC557			50			V
BC558			30			V
Emitter Base Voltage	V_{EBO}	I_E=100uA, I_C=0	5			V
Collector Cut off Current	I_{CBO}	V_{CB}=30V, I_E = 0			15	nA
		V_{CB}=30V, I_E = 0			4	uA
		Tj= 150 deg C				
Collector Cut off Current						
BC556	I_{CES}	V_{CE}=80V		0.2	15	nA
BC557		V_{CE}=50V		0.2	15	nA
BC558		V_{CE}=30V		0.2	15	nA
BC556		V_{CE}=80V,Tj=125° C			4	uA
BC557		V_{CE}=50V,Tj=125° C			4	uA
BC558		V_{CE}=30V,Tj=125° C			4	uA
DC Current Gain						
A	h_{FE}	V_{CE}=5V,I_C=10uA		90		
B				150		
C				270		
BC556	h_{FE}	V_{CE}=5V,I_C=2mA	75		475	
BC557, BC558			75		800	
A			110	180	220	
B			200	290	450	
C			420	500	800	
A	h_{FE}	V_{CE}=5V,I_C=100mA		120		
B				200		
C				400		

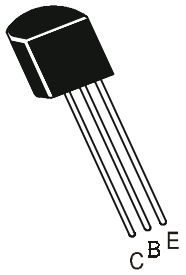

DESCRIPTION	SYMBOL	TEST CONDITION	MIN	TYP	MAX	UNITS
Collector Emitter Saturation Voltage						
	$V_{CE(sat)}$	I_C=10mA,I_B=0.5mA		0.09	0.3	V
		I_C=100mA,I_B=5mA		0.25	0.65	V
Base Emitter Saturation Voltage	$V_{BE(sat)}$	I_C=10mA,I_B=0.5mA		0.70		V
		I_C=100mA,I_B=5mA		0.90		V
Base Emitter On Voltage	$V_{BE(on)}$	I_C=2mA,V_{CE}=5V	0.55	0.66	0.70	V
		I_C=10mA,V_{CE}=5V			0.82	V
DYNAMICS CHARACTERISTICS	**SYMBOL**	**TEST CONDITION**	**MIN**	**TYP**	**MAX**	**UNITS**
Transition Frequency	f_T	I_C=10mA, V_{CE}=5V				
		f=100MHz		150		MHz
Collector output Capacitance	C_{cbo}	V_{CB} =10V, f =1MH_Z			6	pF
Noise Figure	NF	V_{CE} =5V,I_C=0.2mA		2	10	dB
		R_S=2KΩ,f=1$KH_{Z,}$				
		B =200H_Z				
Small Signal Current Gain						
A	h_{fe}	V_{CE} =5V,I_C=2mA		220		
B		f=1KHz		330		
C				600		
Input Impedance						
A	h_{ie}	V_{CE} =5V,I_C=2mA	1.6	2.7	4.5	kΩ
B		f=1KHz	3.2	4.5	8.5	
C			6.0	8.7	15	
Voltage Feedback						
A	h_{re}	V_{CE} =5V,I_C=2mA		1.5		x10
B		f=1KHz		2.0		
C				3.0		
Output Admittance						
A	h_{oe}	V_{CE} =5V,I_C=2mA		18	30	u MHO
B		f=1KHz		30	60	
C				60	110	

TO-92 Plastic Package

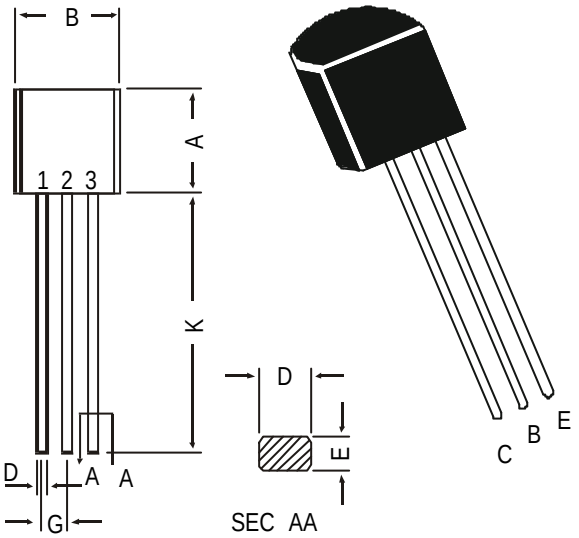

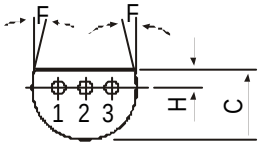

DIM	MIN.	MAX.
A	4.32	5.33
B	4.45	5.20
C	3.18	4.19
D	0.41	0.55
E	0.35	0.50
F	5 DEG	
G	1.14	1.40
H	1.14	1.53
K	12.70	—

All diminsions in mm.

PIN CONFIGURATION
1. COLLECTOR
2. BASE
3. EMITTER

TO-92 Transistors on Tape and Ammo Pack

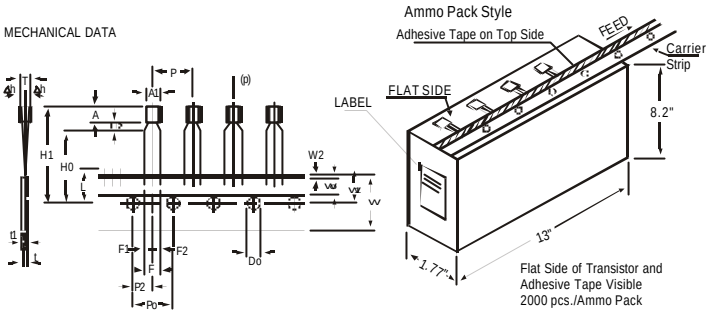

All dimensions in mm unless specified otherwise

ITEM	SYMBOL	SPECIFICATION MIN.	NOM.	MAX.	TOL .	REMARKS
BODY WIDTH	A1	4.0		4.8		
BODY HEIGHT	A	4.8		5.2		
BODY THICKNESS	T	3.9		4.2		
PITCH OF COMPONENT	P		12.7		±1	
FEED HOLE PITCH	Po		12.7		±0.3	CUMULATIVE PITCH ERROR 1.0 mm/20 PITCH
FEED HOLE CENTRE TO COMPONENT CENTRE	P2		6.35		±0.4	TO BE MEASURED AT BOTTOM OF CLINCH
DISTANCE BETWEEN OUTER LEADS	F		5.08		+0.6 -0.2	
COMPONENT ALIGNMENT	Δh		0	1		AT TOP OF BODY
TAPE WIDTH	W		18		±0.5	
HOLD-DOWN TAPE WIDTH	Wo		6		±0.2	
HOLE POSITION	W1		9		+0.7 -0.5	
HOLD-DOWN TAPE POSITION	W2		0.5		±0.2	
LEAD WIRE CLINCH HEIGHT	Ho		16		±0.5	
COMPONENT HEIGHT	H1			23.25		
LENGTH OF SNIPPED LEADS	L			11.0		
FEED HOLE DIAMETER	Do		4		±0.2	
TOTAL TAPE THICKNESS	t			1.2		t1 0.3 - 0.6
LEAD - TO - LEAD DISTANCE	F1, F2		2.54		+0.4 -0.1	
CLINCH HEIGHT	H2			3		
PULL - OUT FORCE	(P)	6N				

NOTES
1. MAXIMUM ALIGNMENT DEVIATION BETWEEN LEADS NOT TO BE GREATER THAN 0.2 mm.
2. MAXIMUM NON-CUMULATIVE VARIATION BETWEEN TAPE FEED HOLES SHALL NOT EXCEED 1 mm IN 20 PITCHES.
3. HOLDDOWN TAPE NOT TO EXCEED BEYOND THE EDGE(S) OF CARRIER TAPE AND THERE SHALL BE NO EXPOSURE OF ADHESIVE.
4. NO MORE THAN 3 CONSECUTIVE MISSING COMPONENTS ARE PERMITTED.
5. A TAPE TRAILER, HAVING AT LEAST THREE FEED HOLES ARE REQUIRED AFTER THE LAST COMPONENT.
6. SPLICES SHALL NOT INTERFERE WITH THE SPROCKET FEED HOLES.

Packing Detail

PACKAGE	STANDARD PACK		INNER CARTON BOX		OUTER CARTON BOX		

Disclaimer

The product information and the selection guides facilitate selection of the CDIL's Discrete Semiconductor Device(s) best suited for application in your product(s) as per your requirement. It is recommended that you completely review our Data Sheet(s) so as to confirm that the Device(s) meet functionality parameters for your application. The information furnishec on the CDIL Web Site/CD is believed to be accurate and reliable. CDIL however, does not assume responsibility for inaccuracies or incomplete information. Furthermore, CDIL does not assume liability whatsoever, arising out of the application or use of any CDIL product; neither does it convey any license under its patent rights nor rights of others These products are not designed for use in life saving/support appliances or systems. CDIL customers selling these products (either as individual Discrete Semiconductor Devices or incorporated in their end products), in any life saving/support appliances or systems or applications do so at their own risk and CDIL will not be responsible for any damages resulting from such sale(s).

CDIL strives for continuous improvement and reserves the right to change the specifications of its products without prior notice.

CDIL is a registered Trademark of
Continental Device India Limited
C-120 Naraina Industrial Area, New Delhi 110 028, India.
Telephone + 91-11-2579 6150, 5141 1112 Fax + 91-11-2579 5290, 5141 1119
emai@cdil.com www.cdilsemi.com