500mA / 3.3V SmartOR™ Power Regulator

Features

- Automatic detection of V_{CC} input supply
- Drive output logic to control external switch
- Glitch-free output during supply transitions
- 500mA output maximum load current
- Built-in hysteresis during supply selection
- Controller operates from either V_{CC} or V_{OUT}
- 8-pin Power SOIC thermal package
- Lead-free version available

Applications

- PCI adapter cards
- Network Interface Cards (NICs)
- Dual power systems
- Systems with standby capabilities
- USB powered devices such as printers, scanners, MP3 players and Zip drives
- See Application Note AP-211

Product Description

The CMPWR150 is a low dropout regulator that delivers up to 500mA of load current at a fixed 3.3V output. An internal threshold level (typically 4.1V) is used to prevent the regulator from being operated below dropout voltage. The device continuously monitors the input supply and will automatically disable the regulator when V_{CC} falls below the threshold level. When the regulator is disabled, the control signal “Drive” (Active Low) is enabled, which allows an external PMOS switch to power the load from an auxiliary 3.3V supply.

When V_{CC} is restored to a level above the select threshold, the control signal for the external PMOS switch is disabled and the regulator is once again enabled.

All the necessary control circuitry needed to provide a smooth and automatic transition between the supplies has been incorporated. This allows V_{CC} to be dynamically switched without loss of output voltage.

The CMPWR150 is housed in an 8-pin SOIC thermally enhanced package which is ideal for space critical applications. The CMPWR150 is available with optional lead-free finishing.

Typical Application Circuit

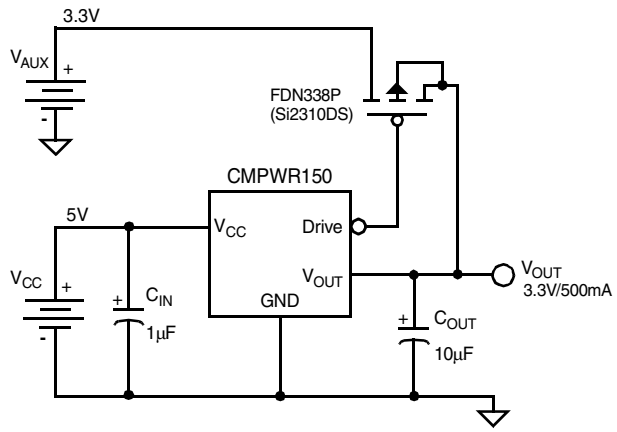

Simplified Electrical Schematic

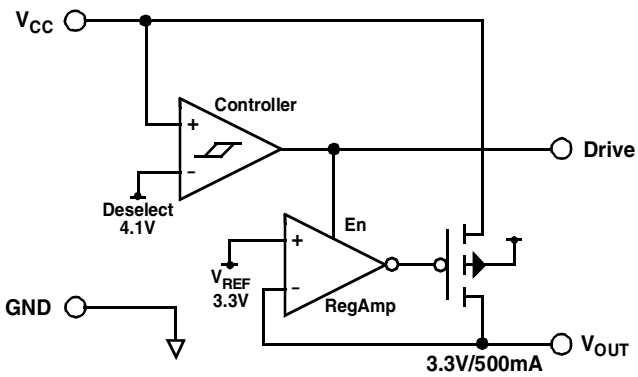

© 2004 California Micro Devices Corp. All rights reserved.

PACKAGE / PINOUT DIAGRAM

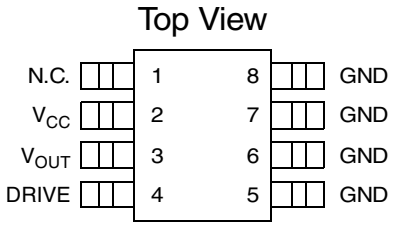

8-pin SOIC
CMPWR150SA

Note: This drawing is not to scale.

PIN DESCRIPTIONS

PIN(S)	NAME	DESCRIPTION
1	N.C.	This is a no-connect pin.
2	V_{CC}	V_{CC} is the power source for the internal regulator and is monitored continuously by an internal controller circuit. Whenever V_{CC} exceeds V_{CCSEL} (4.35V typically), the internal regulator (500mA max) will be enabled and deliver a fixed 3.3V at V_{OUT}. When V_{CC} falls below V_{CCDES} (4.10V typically) the regulator will be disabled. Internal loading on this pin is typically 1.0mA when the regulator is enabled, which decreases to 0.15mA whenever the regulator is disabled. If V_{CC} falls below the voltage on the V_{OUT} pin the V_{CC} loading will further decrease to only a few microamperes. During a V_{CC} power up sequence, there will be an effective step increase in V_{CC} line current when the regulator is enabled. The amplitude of this step increase will depend on the DC load current and any necessary current required for charging/discharging the load capacitance. This line current transient will cause a voltage disturbance at the V_{CC} pin. The magnitude of the disturbance will be directly proportional to the effective power supply source impedance being delivered to the V_{CC} input. To prevent chatter during Select and Deselect transitions, a built-in hysteresis voltage of 250mV has been incorporated. It is recommended that the power supply connected to the V_{CC} input have a source resistance of less than 0.25Ω to minimize the event of chatter during the enabling/disabling of the regulator. An input filter capacitor in close proximity to the V_{CC} pin will reduce the effective source impedance and help minimize any disturbances. If the V_{CC} pin is within a few inches of the main input filter, a capacitor may not be necessary. Otherwise an input filter capacitor in the range of 1µF to 10µF will ensure adequate filtering.
5-8	GND	GND is the negative reference for all voltages. The current that flows in the ground connection is very low (typically 1.0mA) and has minimal variation over all load conditions.
3	V_{OUT}	V_{OUT} is the regulator output voltage connection used to power the load. An output capacitor of ten microfarads is used to provide the necessary phase compensation, thereby preventing oscillation. The capacitor also helps to minimize the peak output disturbance during power supply changeover. When V_{CC} falls below V_{OUT}, then V_{OUT} will be used to provide the necessary quiescent current for the internal reference circuits. This ensures excellent start-up characteristics for the regulator.
4	DRIVE	DRIVE is an active LOW logic output intended to be used as the control signal for driving an external PFET whenever the regulator is disabled. This will allow the voltage at V_{OUT} to be powered from an auxiliary supply voltage (3.3V). The Drive pin is pulled HIGH to V_{CC} whenever the regulator is enabled. This ensures that the auxiliary remains isolated during normal regulator operation.

© 2004 California Micro Devices Corp. All rights reserved.

Ordering Information

PART NUMBERING INFORMATION (SEE NOTE 2)						
			Standard Finish		Lead-free Finish	
Regulator	Pins	Package	Ordering Part Number[1]	Part Marking	Ordering Part Number[1]	Part Marking
CMPWR150	8	Power SOIC	CMPWR150SA	CMPWR150SA	CMPWR150SF	CMPWR150SF

Note 1: Parts are shipped in Tape & Reel form unless otherwise specified.
Note 2: The CMPWR150TO is an obsolete part. Please contact marketing for suitable replacement/alternative product.

Specifications

ABSOLUTE MAXIMUM RATINGS		
PARAMETER	RATING	UNITS
ESD Protection (HBM)	±2000	V
Pin Voltages V_{CC} DRIVE	 [GND - 0.5] to [+6.0] [GND - 0.5] to [V_{CC} + 0.5]	 V V
Storage Temperature Range	-40 to +150	°C
Operating Temperature Range Ambient Junction	 0 to +70 0 to +125	 °C °C
Power Dissipation SOIC (see Note 1)	 1.0	 W

Note 1: The SOIC package used is thermally enhanced through the use of a fused integral leadframe. The power rating is based on a printed circuit board heat spreading capability equivalent to 2 square inches of copper connected to the GND pins. Typical multi-layer boards using power plane construction will provide this heat spreading ability without the need for additional dedicated copper area. (Please consult factory for thermal evaluation assistance.)

STANDARD OPERATING CONDITIONS		
PARAMETER	RATING	UNITS
V_{CC} Input Voltage	4.5 to 5.5	V
Ambient Operating Temperature Range	0 to +70	°C
Load Current	0 to 500	mA
C_{EXT}	10 ±10%	µF

© 2004 California Micro Devices Corp. All rights reserved.

Specifications (cont'd)

ELECTRICAL OPERATING CHARACTERISTICS (SEE NOTE 1)						
SYMBOL	**PARAMETER**	**CONDITIONS**	**MIN**	**TYP**	**MAX**	**UNITS**
V_{OUT}	Regulator Output Voltage	0mA < I_{LOAD} < 500mA	3.135	3.300	3.465	V
I_{OUT}	Regulator Output Current		500	800		mA
V_{CCSEL}	Select Voltage	Regulator Enabled		4.35	4.45	V
V_{CCDES}	Deselect Voltage	Regulator Disabled	3.90	4.10		V
V_{CCHYST}	Hysteresis Voltage	Hysteresis, See Note 2		0.25		V
I_{SC}	Short-circuit Output Current	V_{CC}=5V, V_{OUT}=0V		1200		mA
I_{RCC}	V_{CC} Pin Reverse Leakage	V_{OUT}=3.3V; V_{CC} = 0.0V		5	50	µA
$V_{R\ LOAD}$	Load Regulation	V_{CC}=5V, I_{LOAD}=50mA to 500mA		75		mV
$V_{R\ LINE}$	Line Regulation	V_{CC}=4.5 to 5.5V, I_{LOAD}=5mA		2		mV
I_{CC}	Quiescent Supply Current	V_{CC} > V_{CCSEL}, I_{LOAD}=0mA V_{CCDES} > V_{CC} > V_{OUT} V_{OUT} > V_{CC}		1.0 0.15 0.01	3.0 0.25 0.02	mA mA mA
I_{GND}	Ground Pin Current	Regulator Disabled, Note 3 V_{CC}=5V, I_{LOAD}=5mA, Note 3 V_{CC}=5V, I_{LOAD}=500mA, Note 3		0.15 1.0 1.2	0.30 2.5 3.0	mA mA mA
R_{OH} R_{OL}	Drive Pull-up Resistance Drive Pull-down Resistance	R_{PULLUP} to V_{CC}, V_{CC} > V_{CCSEL} $R_{PULLDOWN}$ to GND, V_{CCDES} > V_{CC}		100 200	400 400	Ω Ω
T_{DH} T_{DL}	Drive High Delay Drive Low Delay	C_{DRIVE}=1nF, V_{CC} T_{RISE} < 100ns C_{DRIVE}=1nF, V_{CC} T_{FALL} < 100ns		1.0 0.2		µS µS

Note 1: Operating Characteristics are over Standard Operating Conditions unless otherwise specified.

Note 2: The hysteresis defines the maximum level of acceptable disturbance on V_{CC} during switching. It is recommended that the V_{CC} source impedance be kept below 0.25Ω to ensure the switching disturbance remains below the hysteresis during select/deselect transitions. An input capacitor may be required to help minimize the switching transient.

Note 3: Ground pin current consists of controller current (0.15mA) and regulator current if enabled. The controller always draws 0.15mA from either V_{CC} or V_{OUT}, whichever is greater. All regulator current is supplied exclusively from V_{CC}. At high load currents a small increase occurs due to current limit protection circuitry.

© 2004 California Micro Devices Corp. All rights reserved.

Typical DC Characteristics

Unless stated otherwise, all DC characteristics were measured at room temperature with a nominal V_{CC} supply voltage of 5.0 volts and an output capacitance of 10µF. The external PMOS switch was present and resistive load conditions were used.

The test data shown here was obtained from engineering samples. The device was modified to allow the regulator to function below the dropout threshold for the purpose of obtaining test data. During normal operation, production parts will shutdown the regulator below a 4.1V supply.

Dropout Characteristics of the regulator are shown in Figure 1. At maximum rated load conditions (500mA), a 100mV drop in regulation occurs when the line voltage collapses below 4.1V. For light load conditions (50mA), regulation is maintained for line voltages as low as 3.5V.

In normal operation, the regulator is deselected at 4.1V, which ensures a regulation output droop of less than 100mV is maintained.

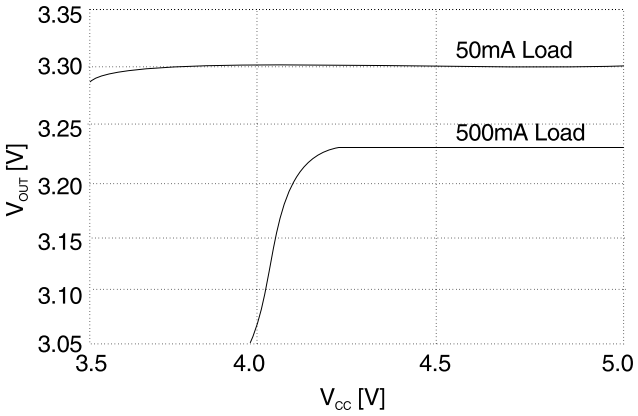

Figure 1. Dropout Characteristics

Load Regulation performance is shown from zero to maximum rated load in Figure 2. A change in load from 10% to 100% of rated, results in an output voltage change of less than 75mV. This translates into an effective output impedance of approximately 0.15 ohms.

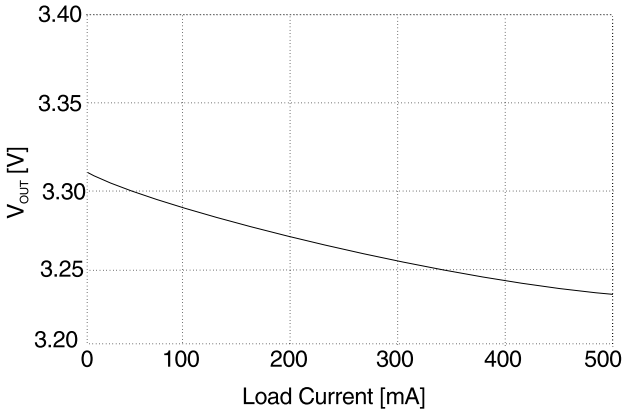

Figure 2. Load Regulation

Ground Current is shown across the entire range of load conditions in Figure 3. The ground current has minimal variation across the range of load conditions and shows only a slight increase at maximum load. This slight increase at rated load is due to the current limit protection circuitry becoming active.

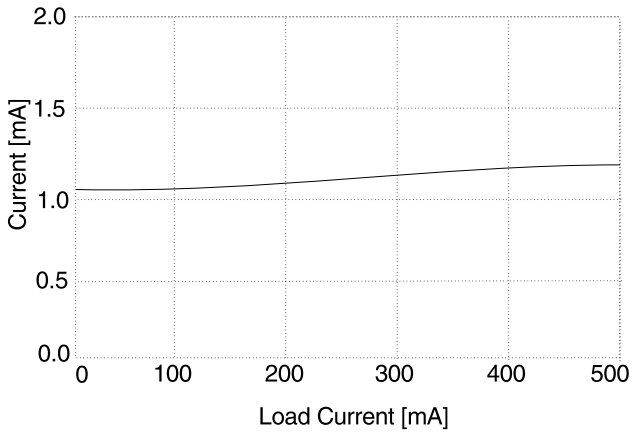

Figure 3. Ground Current

© 2004 California Micro Devices Corp. All rights reserved.

Typical DC Characteristics (cont'd)

V_{CC} Supply Current of the device is shown across the entire V_{CC} range for both V_{AUX} present (3.3V) and absent (0V) in Figure 4.

In the absence of V_{AUX}, the supply current remains fixed at approximately 0.15mA until V_{CC} reaches the Select voltage threshold of 4.35V. At this point the regulator is enabled and a supply current of 1.0mA is conducted.

When V_{AUX} is present, the V_{CC} supply current is less than 10mA until V_{CC} exceeds V_{AUX}, at which point V_{CC} then powers the controller (0.15mA). When V_{CC} reaches V_{SELECT}, the regulator is enabled.

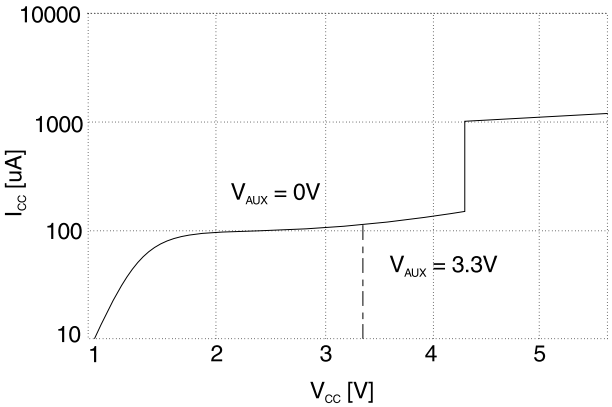

Figure 4. V_{CC} Supply Current (no load)

© 2004 California Micro Devices Corp. All rights reserved.

Typical Transient Characteristics

The transient characterization test set-up shown below includes the effective source impedance of the V_{CC} supply (R_S). This was measured to be approximately 0.2Ω It is recommended that this effective source impedance be no greater than 0.25Ω to ensure precise switching is maintained during V_{CC} selection and deselection.

Both the rise and fall times during V_{CC} power-up/down sequencing were controlled at a 20 millisecond duration. This is considered to represent worst case conditions for most application circuits.

A maximum rated load current of 500mA was used during characterization, unless specified otherwise.

During a selection or deselection transition, the DC load current is switching from V_{AUX} to V_{CC} and vice versa. In addition to the normal load current, there may also be an in-rush current for charging/discharging the load capacitor. The total current pulse being applied to either V_{AUX} or V_{CC} is equal to the sum of the DC load and the corresponding in-rush current. Transient currents in excess of 1.0 amps can readily occur for brief intervals when either supply commences to power the load.

The oscilloscope traces of V_{CC} power-up/down show the full bandwidth response at the V_{CC} and V_{OUT} pins under full load (500mA) conditions.

See Application Note AP-211 for more information.

V_{CC} Power-up Cold Start. Figure 5 shows the output response during an initial V_{CC} power-up with V_{AUX} not present. When V_{CC} reaches the select threshold, the regulator turns on. The uncharged output capacitor causes maximum in-rush current to flow, resulting in a large voltage disturbance at the V_{CC} pin of about 230mV. The built-in hysteresis of 250mV ensures the regulator remains enabled throughout the transient.

Prior to V_{CC} reaching an acceptable logic supply level (2V), a disturbance on the Drive pin can be observed.

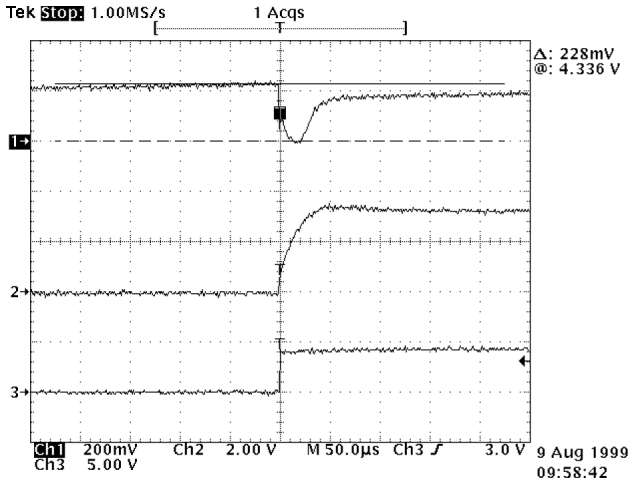

Figure 5. V_{CC} Power-up Cold Start

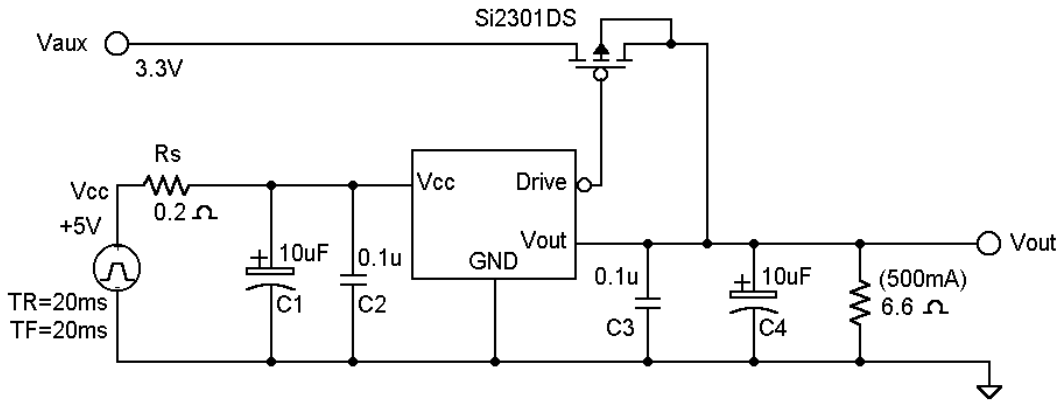

Figure 6. Transient Characteristics Test Set-up

© 2004 California Micro Devices Corp. All rights reserved.

Typical Transient Characteristics (cont'd)

V_{CC} Power-up (V_{AUX} = 3.3V). Figure 7 shows the output response as V_{CC} approaches the select threshold during a power-up when V_{AUX} is present (3.3V). The output capacitor is already fully charged. When V_{CC} reaches the select threshold, the in-rush current is minimal and the V_{CC} disturbance is only 130mV. The built-in hysteresis of 250mV ensures the regulator remains enabled throughout the transient.

V_{OUT} offset = 3.3V, V_{CC} offset = 4.3V

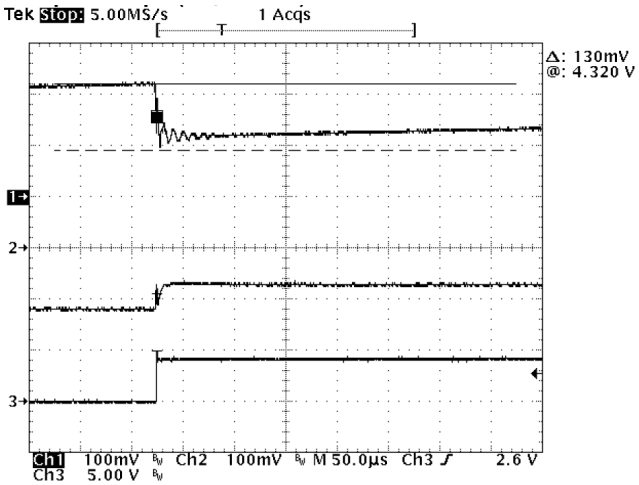

Figure 7. V_{CC} Power-up (V_{AUX} = 3.3V)

V_{CC} Power-up (V_{AUX} =3.0V). Figure 8 shows the output response as V_{CC} approaches the select threshold during power-up. The auxiliary voltage, V_{AUX} is set to a low level of 3.0V. When V_{CC} reaches the select threshold, a modest level of in-rush current is required to further charge the output capacitor resulting in V_{CC} disturbance of 200mV. The built-in hysteresis of 250mV ensures the regulator remains enabled throughout the transient.

V_{OUT} offset = 3.3V, V_{CC} offset = 4.3V

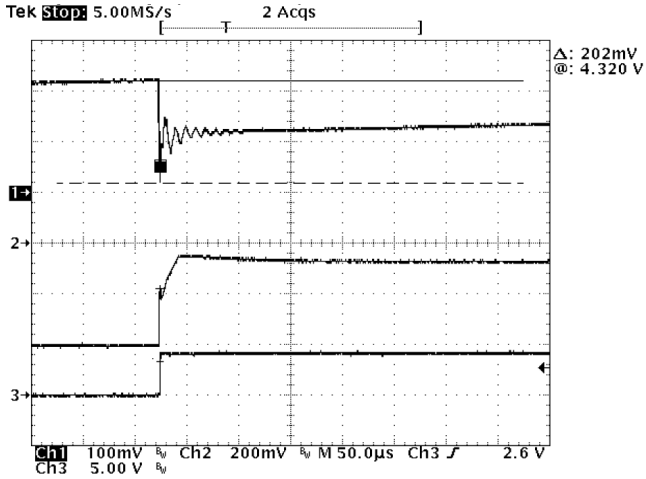

Figure 8. V_{CC} Power-up (V_{AUX} = 3.0V)

V_{CC} Power-down (V_{AUX} = 3.3V). Figure 9 shows the output response as V_{CC} approaches the deselect threshold during a power-down transition. V_{AUX} of 3.3V remains present. When V_{CC} reaches the deselect threshold (4.1V), the regulator turns off. This causes a step change reduction in V_{CC} current resulting in a small voltage increase at the V_{CC} input. This disturbance is approximately 100mV and the built-in hysteresis of 250mV ensures the regulator remains disabled throughout the transient. The output voltage experiences a disturbance of approximately 100mV during the transition.

V_{OUT} offset = 3.3V, V_{CC} offset = 4.3V

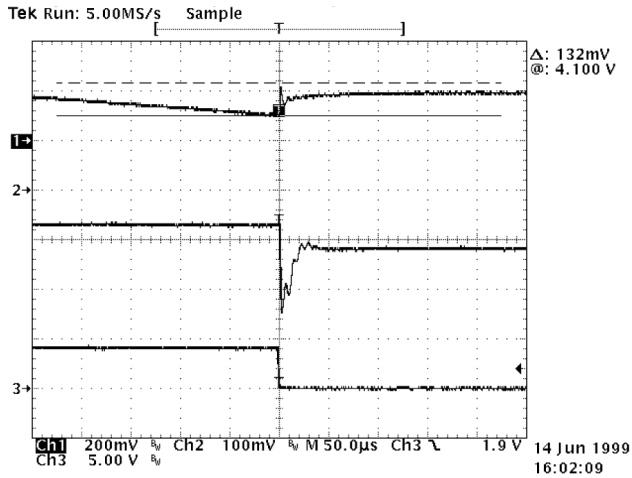

Figure 9. V_{CC} Power-down (V_{AUX} = 3.3V)

© 2004 California Micro Devices Corp. All rights reserved.

Typical Transient Characteristics (cont'd)

Load Step Response. Figure 10 shows the output response of the regulator during a step load change from 5mA to 500mA (represented on Ch1). An initial transient overshoot of 50mV occurs and the output settles to its final voltage within a few microseconds. The dc voltage disturbance on the output is approximately 75mV, which demonstrates the regulator output impedance of 0.15Ω

V_{OUT} offset = 3.3V

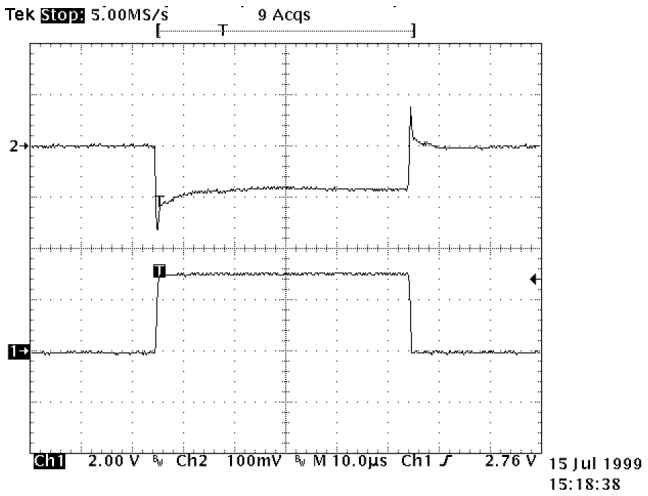

Figure 10. Load Step Response

Line Step Response. Figure 11 shows the output response of the regulator to a V_{CC} line voltage transient between 4.5V and 5.5V (1Vpp as shown on Ch1). The load condition during this test is 5mA. The output response produces less than 10mV of disturbance on both edges indicating a line rejection of better than 40dB at high frequencies.

V_{OUT} offset = 3.3V

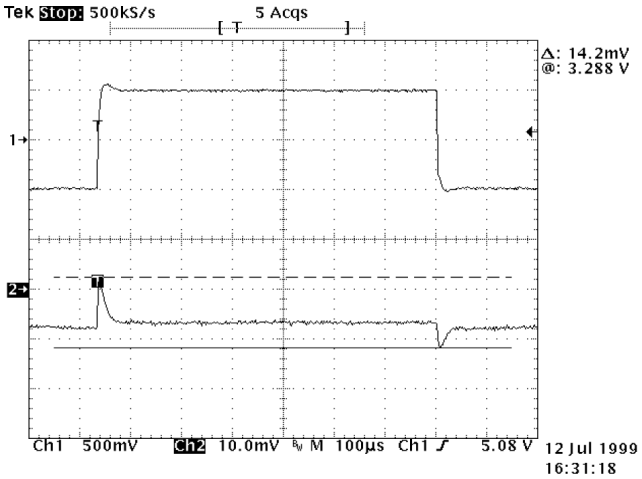

Figure 11. Line Step Response

© 2004 California Micro Devices Corp. All rights reserved.

Typical Thermal Characteristics

Thermal dissipation of junction heat consists primarily of two paths in series. The first path is the junction to the case (θ_{JC}) thermal resistance, which is defined by the package style, and the second path is the case to ambient (θ_{CA}) thermal resistance, which is dependent on board layout.

For a given package style and board layout, the operating junction temperature is a function of junction power dissipation P_{JUNC} and the ambient temperature, resulting in the following thermal equation:

$$T_{JUNC} = T_{AMB} + P_{JUNC}(\theta_{JC}) + P_{JUNC}(\theta_{CA})$$

Measurements showing performance up to maximum junction temperature of 125°C were performed under light load conditions (5mA). This allows the ambient temperature to be representative of the internal junction temperature.

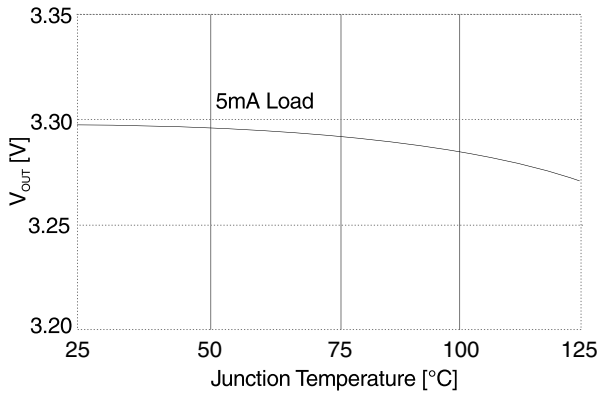

Figure 12. Output Voltage vs. Temperature

Output Voltage vs. Temperature. Figure 12 shows the regulator V_{OUT} performance up to the maximum rated junction temperature. The overall 100°C variation in junction temperature causes an output voltage change of about 30mV, reflecting a voltage temperature coefficient of 90ppm/°C.

Output Voltage (500mA) vs. Temperature. Figure 13 shows the regulator steady state performance when fully loaded (500mA) in an ambient temperature up to the rated maximum of 70°C. The output variation at maximum load is approximately 25mV across the normal temperature range.

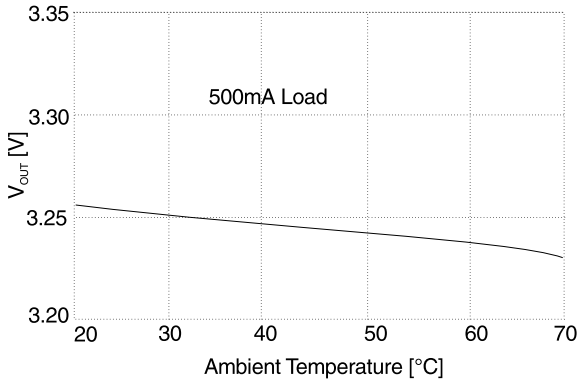

Figure 13. Output Voltage (500mA) vs. Temperature

Thresholds vs. Temperature. Figure 14 shows the regulator select/deselect threshold variation up to the maximum rated junction temperature. The overall 100°C change in junction temperature causes a 30mV variation in the select threshold voltage (regulator enable). The deselect threshold level varies about 50mV over the 100°C change in junction temperature. This results in the built-in hysteresis having minimal variation over the entire operating junction temperature range.

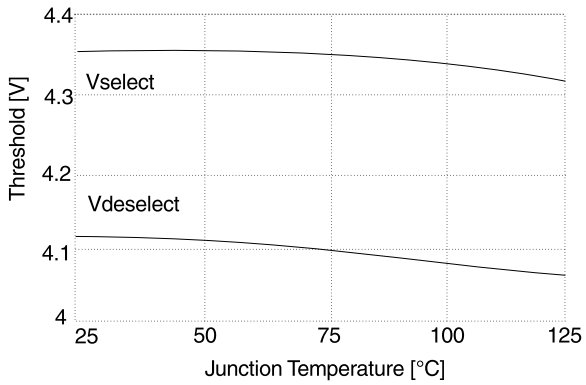

Figure 14. Threshold vs. Temperature

© 2004 California Micro Devices Corp. All rights reserved.

Mechanical Details (cont'd)

SOIC-8 Mechanical Specifications

Dimensions for CMPWR150 devices packaged in 8-pin SOIC packages are presented below.

For complete information on the SOIC-8 package, see the California Micro Devices SOIC Package Information document.

PACKAGE DIMENSIONS				
Package	SOIC			
Pins	8			
Dimensions	**Millimeters**		**Inches**	
	Min	**Max**	**Min**	**Max**
A	1.35	1.75	0.053	0.069
A_1	0.10	0.25	0.004	0.010
B	0.33	0.51	0.013	0.020
C	0.19	0.25	0.007	0.010
D	4.80	5.00	0.189	0.197
E	3.80	4.19	0.150	0.165
e	1.27 BSC		0.050 BSC	
H	5.80	6.20	0.228	0.244
L	0.40	1.27	0.016	0.050
# per tube	100 pieces*			
# per tape and reel	2500 pieces			
Controlling dimension: inches				

* This is an approximate number which may vary.

Mechanical Package Diagrams

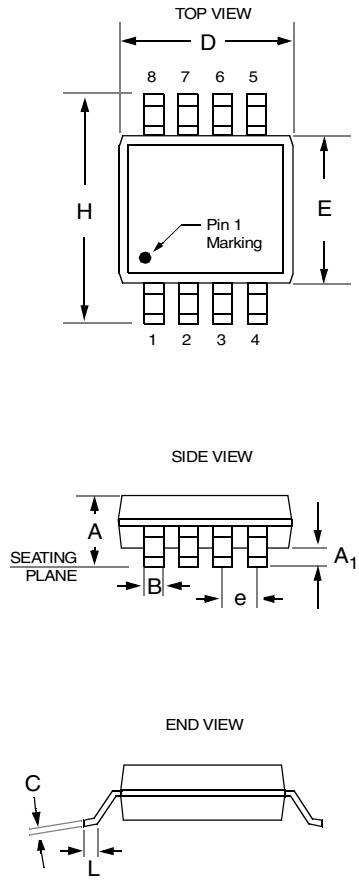

Package Dimensions for SOIC-8

© 2004 California Micro Devices Corp. All rights reserved.