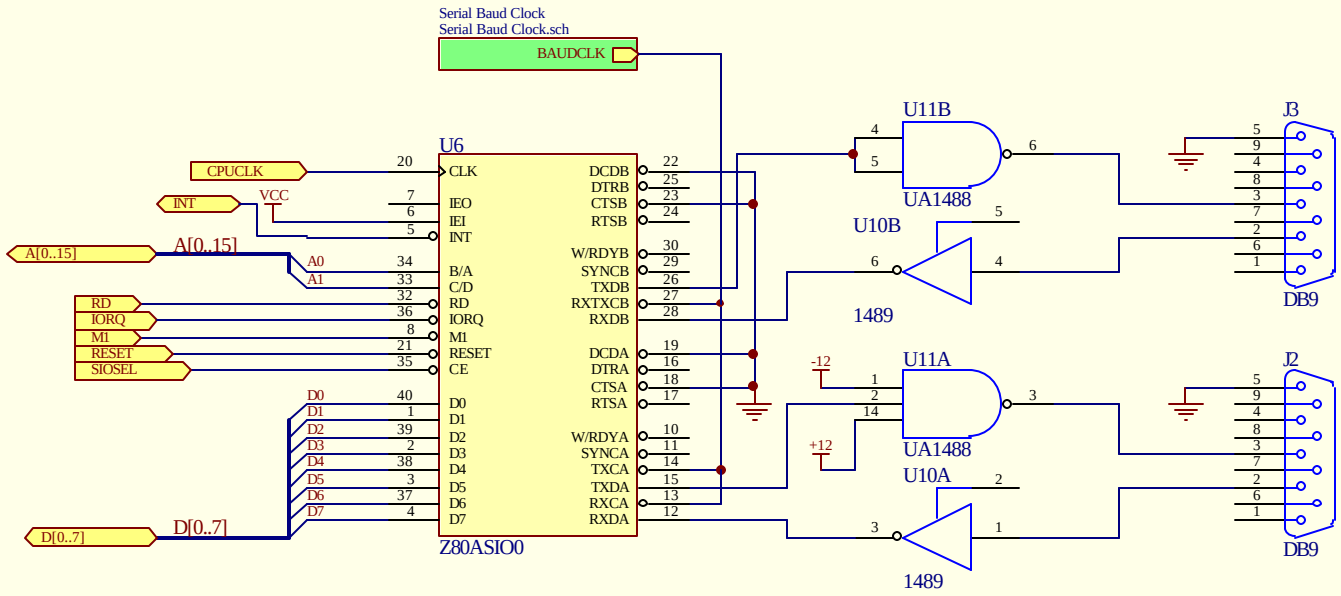

Title **Serial IO**			Protel International P/L L3, 12a Rodborough Rd Frenchs Forest NSW Australia 2086
Size: A	Number:	Revision:	
Date: 21-Apr-2001	Time: 10:16:01	Sheet 3 of 8	
File: C:\Program Files\Design Explorer 99 SE\Examples\Z80 Microprocessor.Ddb - Z80 Processor\Serial Interface.sch			