NPN T-1 Standard Phototransistor

LTR-4206/LTR-4206E

Features

- Wide range of collector currents.
- Lens for high sensitivity.
- Low cost plastic package.

Description

The LTR-4206 series consist of a NPN silicon phototransistor mounted in a lensed, clear plastic, end looking package. The lensing effect of the package allows an acceptance half angle of 10° measured from the optical axis to the half power point. This series is mechanically and spectrally matched to the LTE-4206 series of infrared emitting diodes. The LTR-4206E is a special dark plastic package that cut the visible light and suitable for the detectors of infrared application.

Package Dimensions

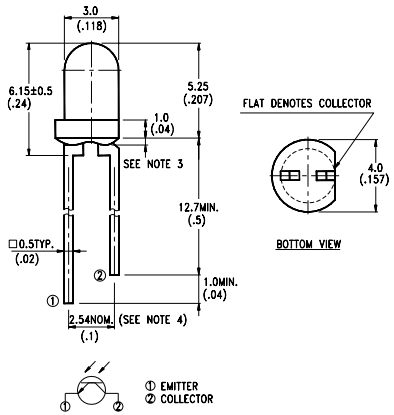

Notes:

1. All dimensions are in millimeters (inches).
2. Tolerance is ±0.25mm (.010") unless otherwise noted.
3. Protruded resin under flange is 1.5mm (.059") max.
4. Lead spacing is measured where the leads emerge from the package.
5. Specifications are subject to change without notice.

Absolute Maximum Ratings at Ta=25℃

Parameter	Maximum Rating	Unit
Power Dissipation	100	mW
Collector-Emitter Voltage	30	V
Emitter-Collector Voltage	5	V
Operating Temperature Range	-40℃ to +85℃	
Storage Temperature Range	-55℃ to +100℃	
Lead Soldering Temperature [1.6mm (.063 in.) from body]	260℃ for 5 Seconds	

Electrical Optical Characteristics at Ta=25℃

Parameter	Symbol	Part No.	Min.	Typ.	Max.	Unit	Test Condition
Collector-Emitter Breakdown Voltage	$V_{(BR)CEO}$		30			V	I_C=1mA Ee=0mW/cm²
Emitter-Collector Breakdown Voltage	$V_{(BR)ECO}$		5			V	I_E=100 μA Ee=0mW/cm²
Collector Emitter Saturation Voltage	$V_{CE(SAT)}$				0.4	V	I_C=100 μA Ee=1mW/cm²
Rise Time	Tr			10		μS	V_{CC}=5V I_C=1mA R_L=1KΩ
Fall Time	Tf			15		μS	
Collector Dark Current	I_{CEO}				100	nA	V_{CE}=10V Ee=0mW/cm²
On State Collector Current	$I_{C(ON)}$	LTR-4206	1	4		mA	V_{CE}=5V Ee=1mW/cm² λ =940nm
		LTR-4206E	1	2			

INFRARED PRODUCTS

Typical Electrical/Optical Characteristic Curves
(25℃ Ambient Temperature Unless Otherwise Noted)

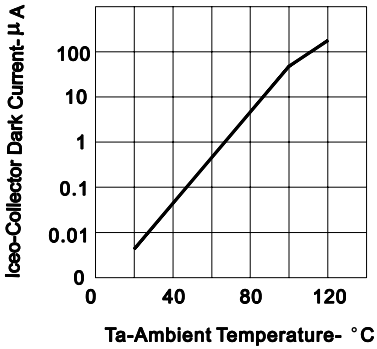

FIG.1 COLLECTOR DARK CURRENT VS AMBIENT TEMPERATURE

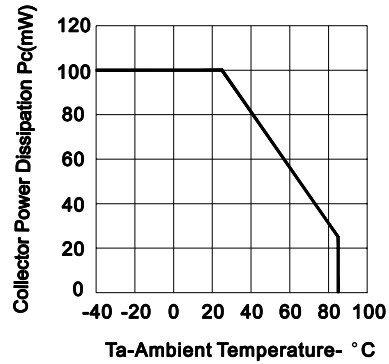

FIG.2 COLLECTOR POWER DISSIPATION VS AMBIENT TEMPERATURE

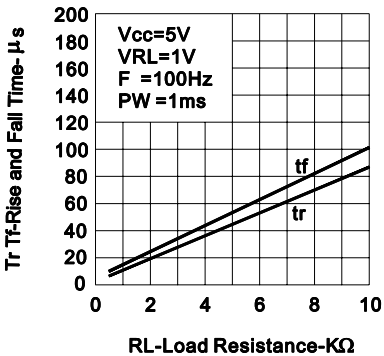

FIG.3 RISE AND FALL TIME VS LOAD RESISTANCE

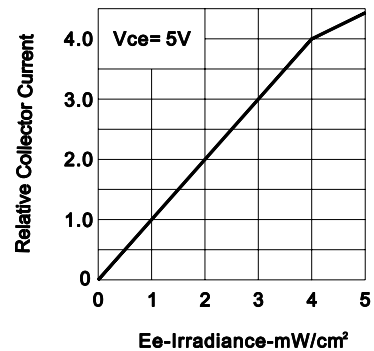

FIG.4 RELATIVE COLLECTOR CURRENT VS IRRADIANCE

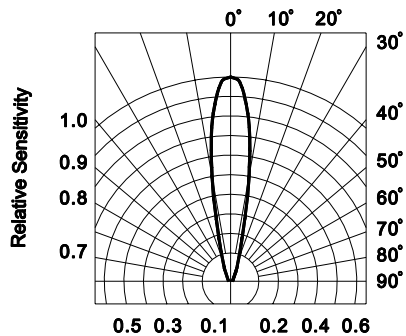

FIG.5 SENSITIVITY DIAGRAM