TDA7482

25W MONO CLASS-D AMPLIFIER

- 25W OUTPUT POWER:
  R_L = 8Ω/4Ω; THD = 10%
- HIGH EFFICIENCY
- WIDE SUPPLY VOLTAGE RANGE (UP TO ±25V)
- SPLIT SUPPLY
- OVERVOLTAGE PROTECTION
- ST-BY AND MUTE FEATURES
- SHORT CIRCUIT PROTECTION
- THERMAL OVERLOAD PROTECTION

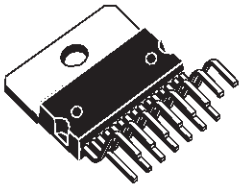

Multiwatt15

ORDERING NUMBER: TDA7482

DESCRIPTION

The TDA7482 is an audio class-D amplifier assembled in Multiwatt15 package specially designed for high efficiency applications mainly for TV and Home Stereo sets.

Figure 1: Test and Application circuit.

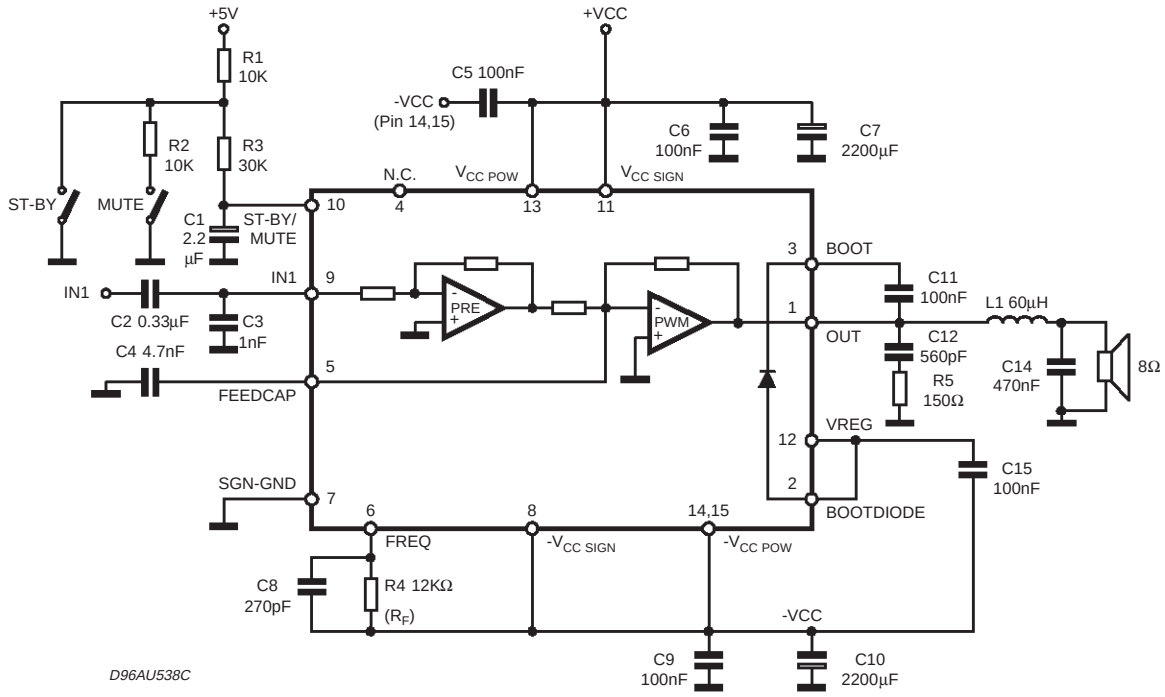

ABSOLUTE MAXIMUM RATINGS

Symbol	Parameter	Value	Unit
V_{CC}	DC Supply Voltage	±28	V
P_{tot}	Power Dissipation T_{case} = 70°C	35	W
T_{stg}, T_j	Storage and Junction Temperature	–40 to 150	°C
V_{FREQ}	Maximum Voltage Across RF (pin6)	8	V
T_{op}	Operating Temperature Range	0 to 70	°C
ESD	Max ESD on Pins	±1.2	KV

PIN CONNECTION (Top view)

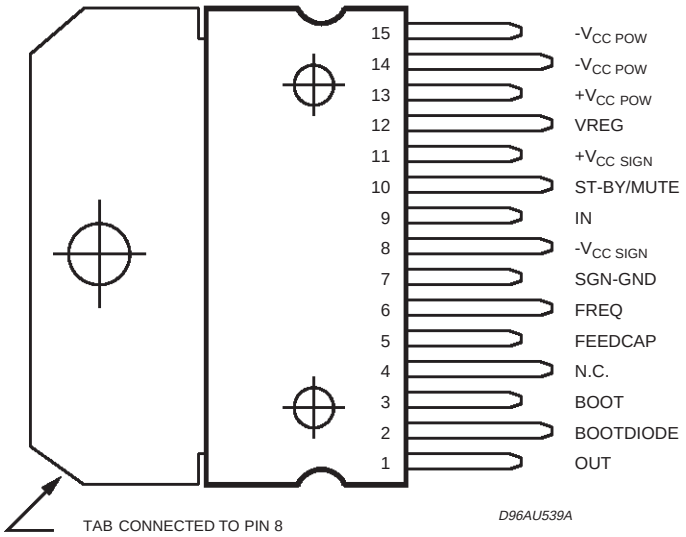

THERMAL DATA

Symbol	Parameter	Typ.	Max.	Unit
$R_{th\ j\text{-}case}$	Thermal Resistance Junction-case	1.8	2.5	°C/W

PIN FUNCTIONS

N.	Name	Function
1	OUT	PWM OUTPUT
2	BOOTDIODE	BOOTSTRAP DIODE ANODE
3	BOOT	BOOTSTRAP
4	NC	NOT CONNECTED
5	FEEDCAP	FEEDBACK INTEGRATING CAPACITOR
6	FREQ	SETTING FREQUENCY RESISTOR
7	SGN-GND	SIGNAL GROUND
8	$–V_{CC}$ SIGN	SIGNAL NEGATIVE SUPPLY
9	IN	INPUT
10	ST-BY/MUTE	CONTROL STATE PIN
11	$+V_{CC}$ SIGN	POSITIVE SIGNAL SUPPLY
12	VREG	INTERNAL VOLTAGE REGULATOR
13	$+V_{CC}$ POW	POSITIVE POWER SUPPLY
14	$-V_{CC}$ POW	NEGATIVE POWER SUPPLY (to be connected to pin 13 via CS)
15	$-V_{CC}$ POW	NEGATIVE POWER SUPPLY (to be connected to pin 13 via CS)

ELECTRICAL CHARACTERISTICS (Refer to the test circuit, V_{CC} = ±21V; R_L = 8Ω; R_S = 50Ω; R_F = 12KΩ; Demod.. filter L = 60µH, C = 470nF; f = 1KHz; T_{amb} = 25°C unless otherwise specified.)

Symbol	Parameter	Test Condition	Min.	Typ.	Max.	Unit
V_S	Supply Range		±10		±25	V
I_q	Total Quiescent Current	$R_L = \infty$, No LC Filter		40	60	mA
V_{OS}	Output Offset Voltage	Play Condition	–70	-30	10	mV
P_O	Output Power	THD = 10% THD = 1%	20 14	25 18		W W
P_O	Output Power	R_L = 4Ω ; V_{CC} = ±16V; THD = 10% THD = 1% (*)		 25 18		 W W
P_D	Maximum Dissipated Power	V_{CC} =±21V; R_L = 8Ω; P_O = 25W THD 10%		3.8		W
η	Efficiency $\equiv \frac{P_O}{P_O + P_D} \equiv \frac{P_O}{P_I}$ (**)	V_{CC} = ±21V; R_L = 8Ω; P_O = 18W THD 10%		87		%
η_{max}	Top Efficiency maximum	V_{CC} = ±25V; R_L = 8Ω; P_O = 43W THD 20%		88.5		%
THD	Total Harmonic Distortion	R_L = 8Ω; P_O = 1W		0.1		%
I_{max}	Overcurrent Protection Threshold	R_L = 0	3.5	5		A
T_j	Thermal Shut-down Junction Temperature			150		°C
G_V	Closed Loop Gain		29	30	31	dB
e_N	Total Input Noise	A Curve f = 20Hz to 22KHz		7 12		µV µV
$V_{CCTOTMAX}$	Maximum Total V_{CC} Protection		50			V
R_i	Input Resistance		20	30		kΩ
SVR	Supply Voltage Rejection	f = 100Hz; V_r = 0.5	46	60		dB
T_r, T_f	Rising and Falling Time			50		ns
R_{DSON}	Power Transistor on Resistance			0.4		Ω
F_{SW-OP}	Switching Frequency Operative Range		100		200	KHz
F_{SW}	Switching Frequency		100	120	140	KHz
B_F	Zero Signal Frequency Constant (***)			1.4×10^9		HzΩ
R_F	Frequency Controller Resistor Range (****)		7	12	14	KΩ
MUTE & STAND-BY FUNCTIONS						
V_{ST-BY}	Stand-by range				0.8	V
V_{MUTE}	Mute Range		1.8		2.5	V
V_{PLAY}	Play Range (1)		4			V
A_{MUTE}	Mute Attenuation		60	80		dB
I_{qST-BY}	Quiescent Current @ Stand-by			3	5	mA

*: The output LC filter must be changed to: L = 30µH; C = 1µF

**: P_O = measured across the load using the following inductor:
COIL 58120 MPPA2 (magnetics) TURNS: 28 ∅ 1mm

***: The zero-signal switching frequency can be obtained using the following expression: $F_{SW} = B_F/R_F$

****: The maximum value of R_F is related to the maximum possible value for the voltage drop on R_F itself

(1) For V10 >5.2V, an input impedance of 10KΩ is to be considered

Figure 2: Recommended P.C. Board and Component Layout of the Circuit of Figure 1 (1.25:1 scale)

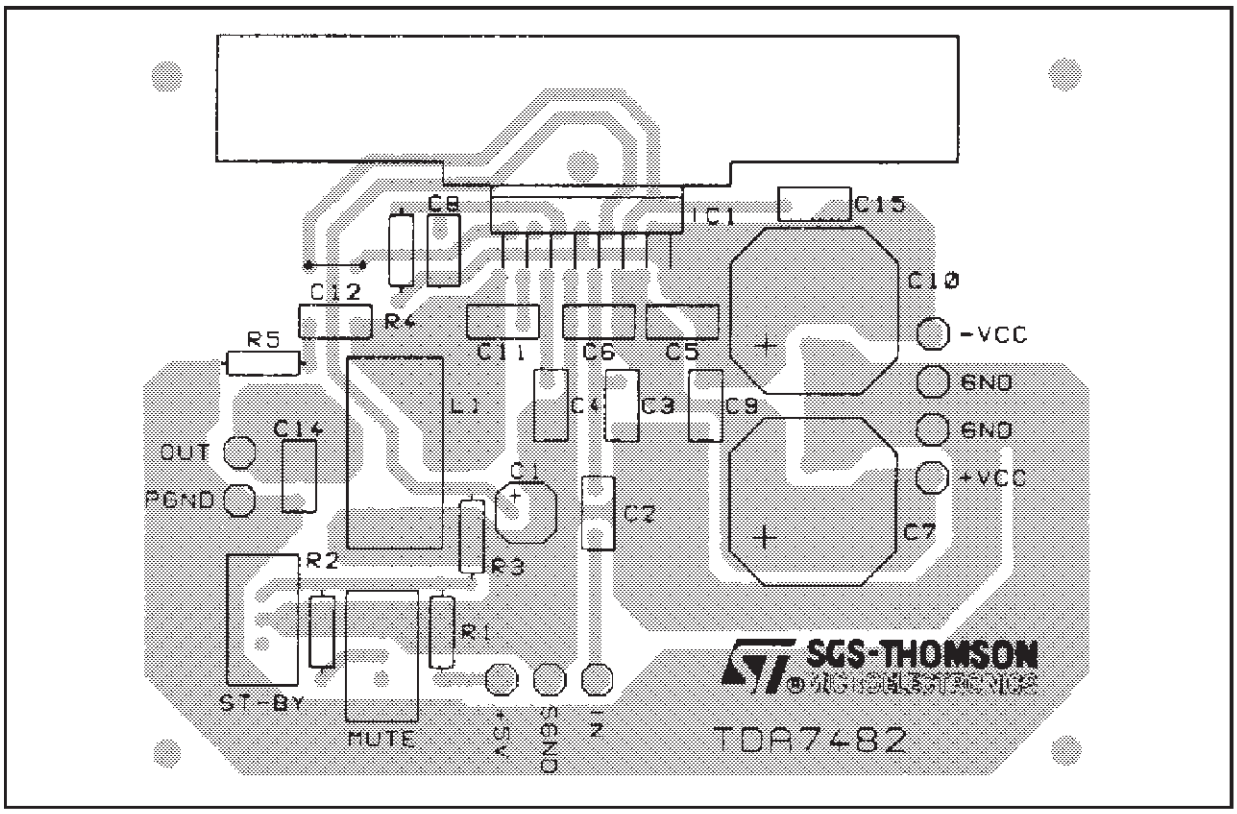

Note: Capacitor C5 must be as close as possible to device's pins 16 and 17

MULTIWATT15 PACKAGE MECHANICAL DATA

DIM.	mm			inch		
	MIN.	TYP.	MAX.	MIN.	TYP.	MAX.
A			5			0.197
B			2.65			0.104
C			1.6			0.063
D		1			0.039	
E	0.49		0.55	0.019		0.022
F	0.66		0.75	0.026		0.030
G	1.02	1.27	1.52	0.040	0.050	0.060
G1	17.53	17.78	18.03	0.690	0.700	0.710
H1	19.6			0.772		
H2			20.2			0.795
L	21.9	22.2	22.5	0.862	0.874	0.886
L1	21.7	22.1	22.5	0.854	0.870	0.886
L2	17.65		18.1	0.695		0.713
L3	17.25	17.5	17.75	0.679	0.689	0.699
L4	10.3	10.7	10.9	0.406	0.421	0.429
L7	2.65		2.9	0.104		0.114
M	4.25	4.55	4.85	0.167	0.179	0.191
M1	4.63	5.08	5.53	0.182	0.200	0.218
S	1.9		2.6	0.075		0.102
S1	1.9		2.6	0.075		0.102
Dia1	3.65		3.85	0.144		0.152