Принципиальная электрическая схема DVD-проигрывателя «Rolsen RDV-630»

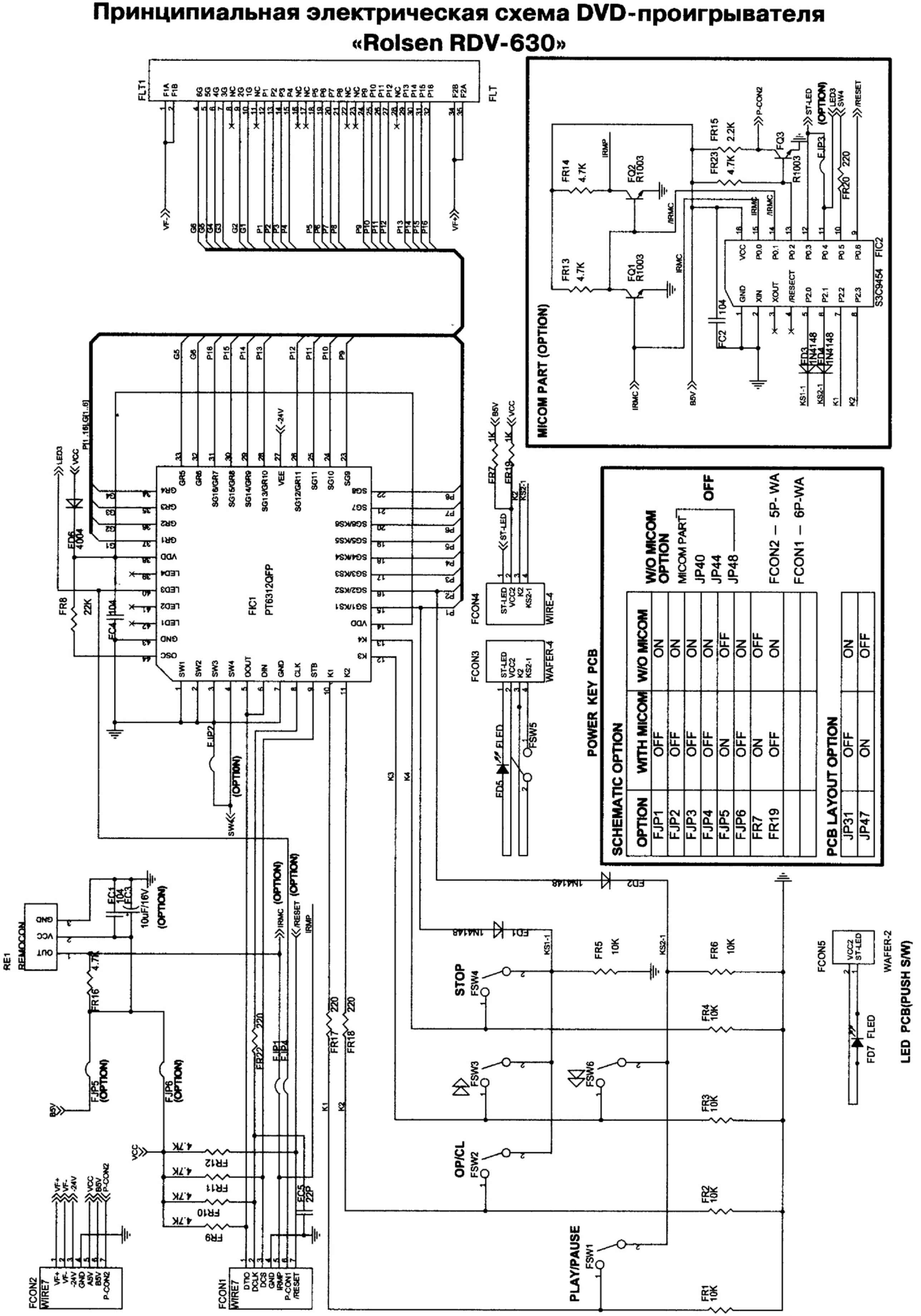

Передняя панель

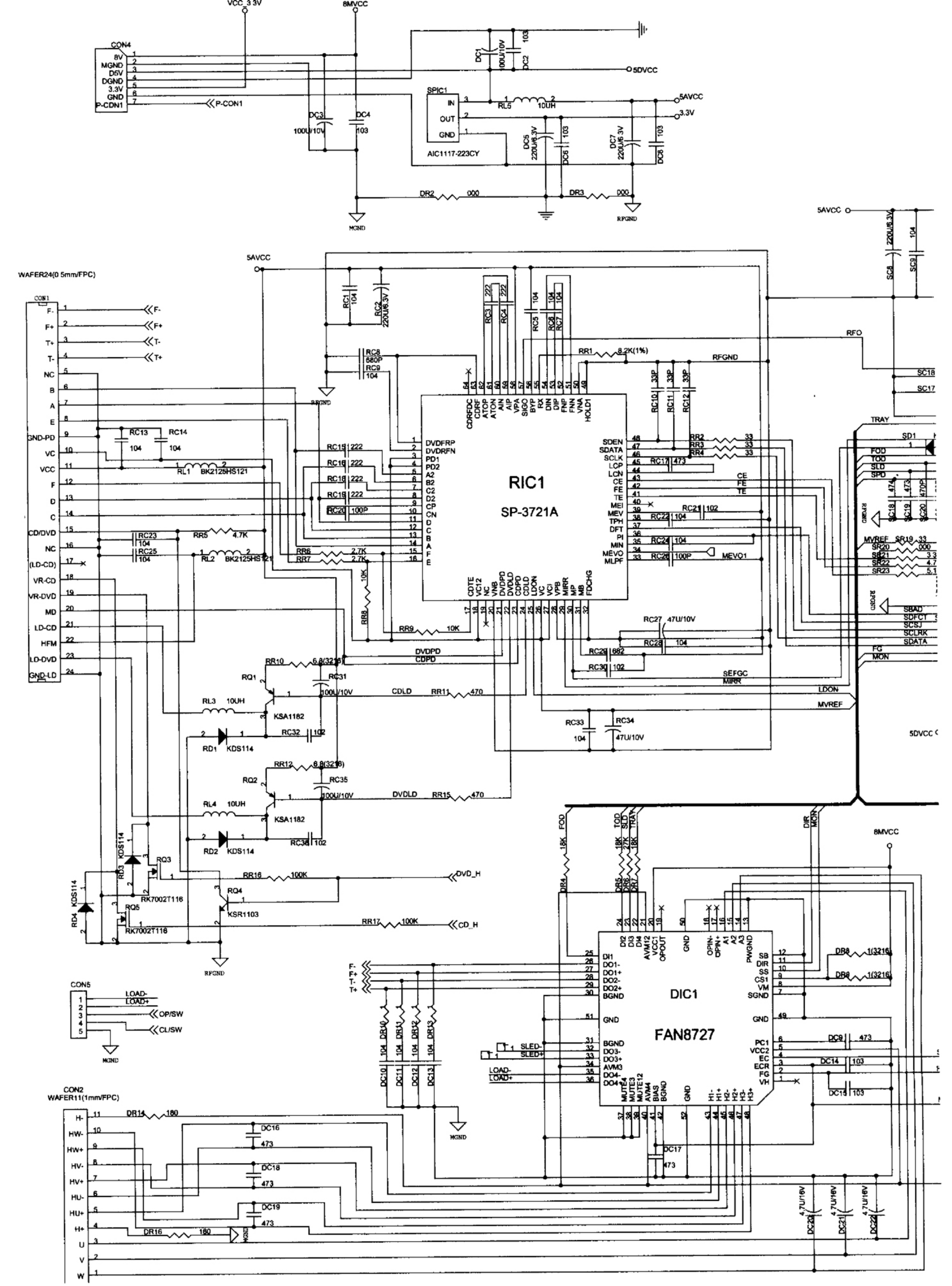
VCC_3.3V
8MVCC
CON4
8V
MGND
D5V
DGND
3.3V
GND
P-CDN1
P-CON1
DC1
100U/10V
DC2
103
5DVCC
SPIC1
IN
OUT
GND
AIC1117-223CY
RL5
10UH
5AVCC
3.3V
DC3
100U/10V
DC4
103
DC5
220U/6.3V
DC6
103
DC7
220U/6.3V
DC8
103
DR2
000
DR3
000
MGND
RFGND
WAFER24(0.5mm/FPC)
CON1
F-
F+
T+
T-
NC
B
A
E
GND-PD
VC
VCC
F
D
C
CD/DVD
NC
(LD-CD)
VR-CD
VR-DVD
MD
LD-CD
HFM
LD-DVD
GND-LD
RC1
104
RC2
220U/6.3V
RC3
222
RC4
222
RC5
104
RC6
104
RC7
104
RC8
680P
RC9
104
RC13
104
RC14
104
RL1
BK2125HS121
RC15
222
RC16
222
RC18
222
RC19
222
RC20
100P
RC23
104
RC25
104
RR5
4.7K
RL2
BK2125HS121
RR6
2.7K
RR7
2.7K
RR8
10K
RR9
10K
RIC1
SP-3721A
DVDFRP
DVDRFN
PD1
PD2
A2
B2
C2
D2
CP
CN
D
C
B
A
F
E
CDRFDC
CDRF
ATOP
ATON
AIN
AIP
VPA
SIGO
BYP
RX
DIN
DIP
FNP
FNN
VNA
HOLD1
CDTE
VC12
NC
VNB
DVDPD
DVDLD
CDPD
CDLD
LDON
VC
VCI
VPB
MIRR
MP
MB
FDCHG
SDEN
SDATA
SCLK
LCP
LCN
CE
FE
TE
MEI
MEV
TPH
DFT
PI
MIN
MEVO
MLPF
RR1
8.2K(1%)
RFO
RFGND
RC10
33P
RC11
33P
RC12
33P
RR2
33
RR3
33
RR4
33
RC17
473
RC21
102
RC22
104
RC24
104
RC26
100P
MEVO1
RC27
47U/10V
RC28
104
RC29
682
RC30
102
SEFGC
MIRR
LDON
MVREF
RC33
104
RC34
47U/10V
5AVCC
220U/6.3V
SC8
104
SC9
SC18
SC17
TRAY
SD1
FOD
TOD
SLD
SPD
SC18
SC19
SC20
MVREF
SR19
33
SR20
000
SR21
3.3
SR22
4.7
SR23
5.1
SBAD
SDFCT
SCSJ
SCLRK
SDATA
FG
MON
5DVCC
RR10
6.8(3216)
RC31
100U/10V
RQ1
CDLD
RR11
470
RL3
10UH
KSA1182
RC32
102
RD1
KDS114
RR12
6.8(3216)
RC35
100U/10V
RQ2
DVDLD
RR15
470
RL4
10UH
KSA1182
RC36
102
RD2
KDS114
RD3
KDS114
RQ3
RK7002T116
RR16
100K
DVD_H
RQ4
KSR1103
RD4
KDS114
RQ5
RK7002T116
RR17
100K
CD_H
RFGND
CON5
LOAD-
LOAD+
OP/SW
CL/SW
MGND
F-
F+
T-
T+
DR30
104
DR31
104
DR32
104
DR33
104
DC10
DC11
DC12
DC13
SLED-
SLED+
LOAD-
LOAD+
DIC1
FAN8727
DI1
DO1-
DO1+
DO2-
DO2+
BGND
GND
BGND
DO3-
DO3+
AVM3
DO4-
DO4+
SB
DIR
SS
CS1
VM
SGND
GND
PC1
VCC2
EC
ECR
FG
VH
DR8
1(3216)
DR9
1(3216)
DC9
473
DC14
103
DC15
103
DC17
473
FOD
18K
DR4
TOD
18K
SLD
27K
TRAY
18K
DR5
DR6
DR7
DIR
MCN
8MVCC
CON2
WAFER11(1mm/FPC)
H-
HW-
HW+
HV-
HV+
HU-
HU+
H+
U
V
W
DR14
180
DC16
473
DC18
473
DC19
473
DR16
180
MGND
DC20
4.7U/16V
DC21
4.7U/16V
DC22
4.7U/16V

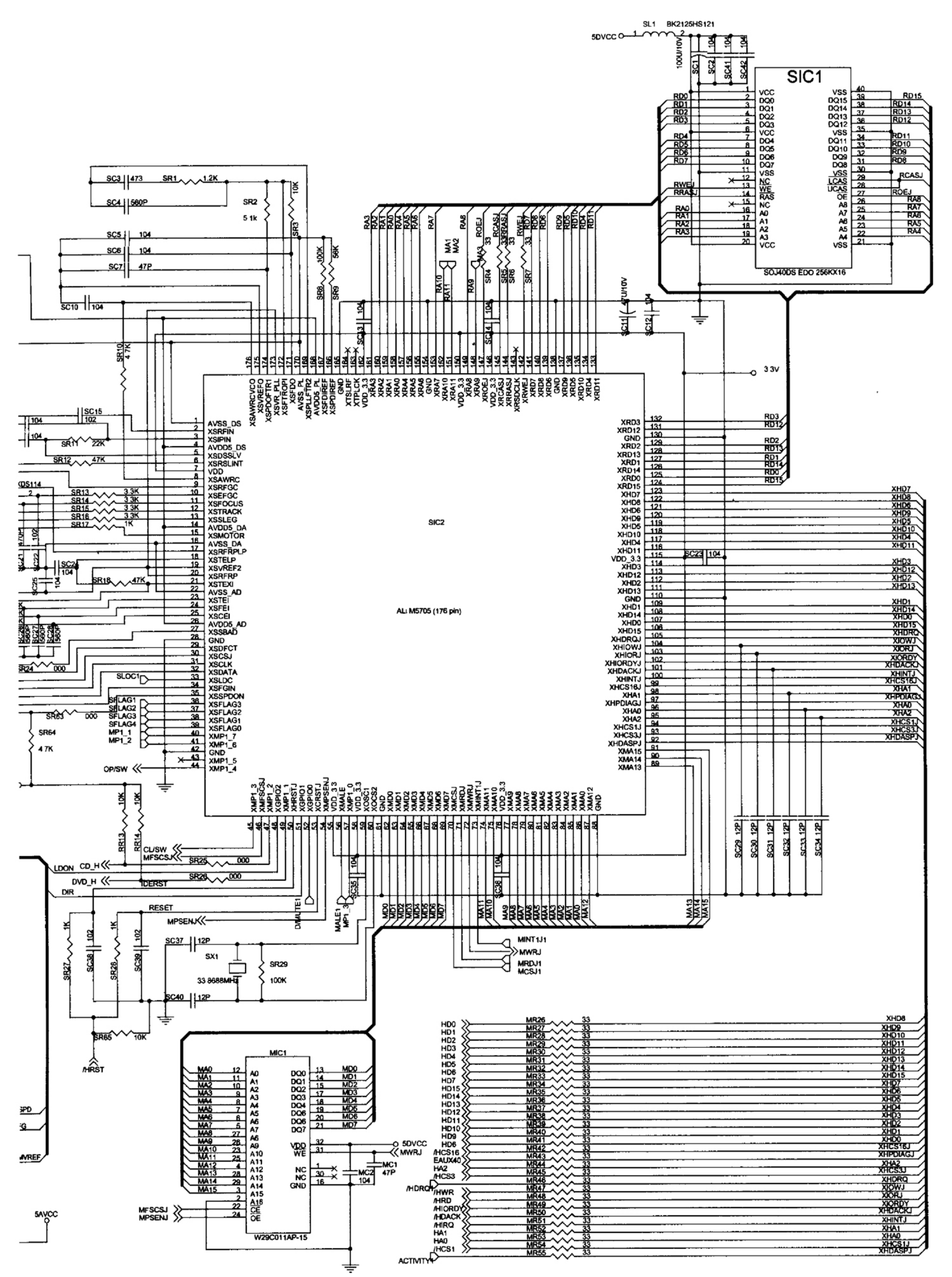

ВЧ тракт. Драйвер DVD-привода. Микроконтроллер

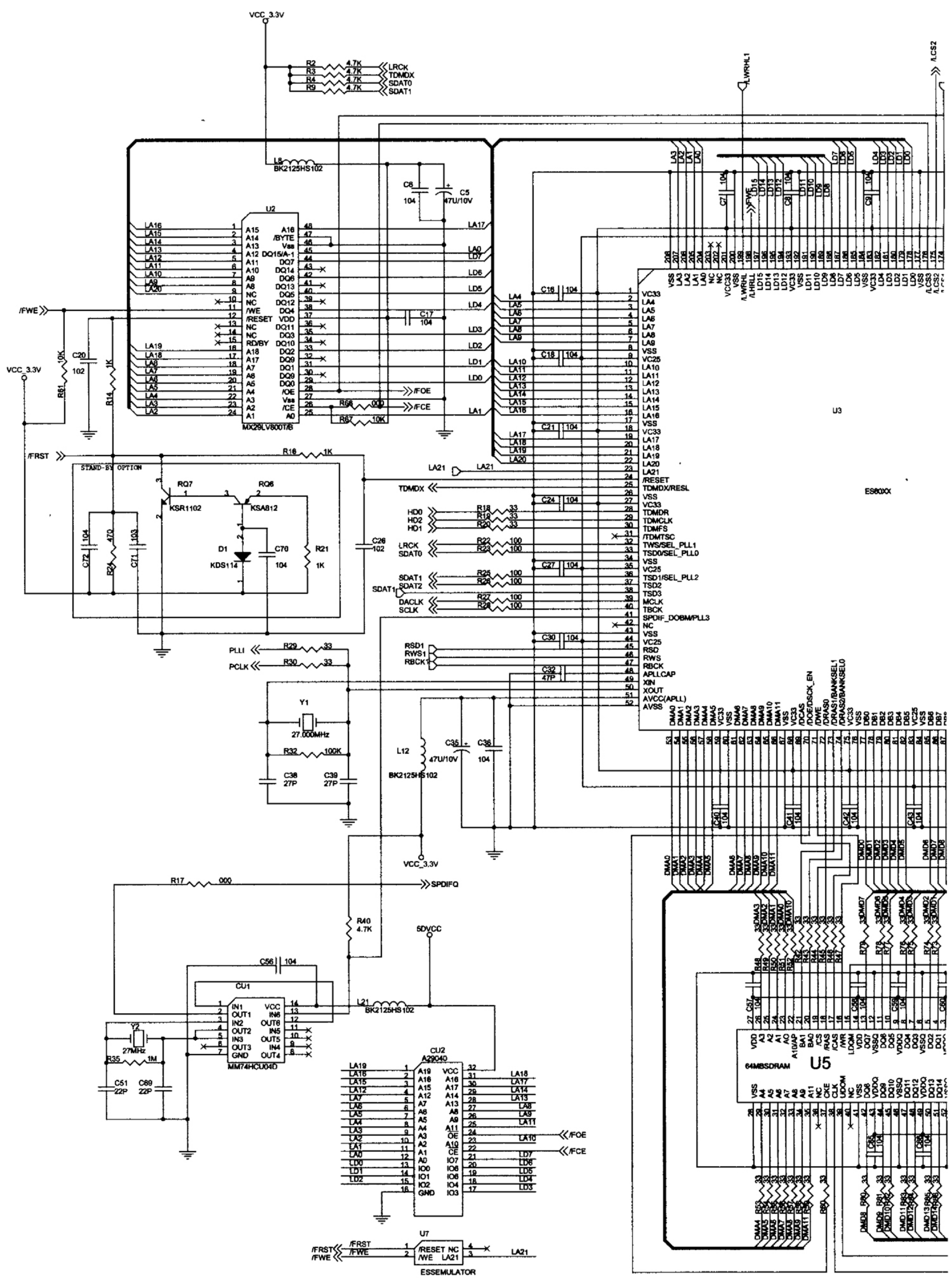
VCC_3.3V
R2 4.7K LRCK
R3 4.7K TDMDX
R4 4.7K SDAT0
R9 4.7K SDAT1
L8 BK2125HS102
C8 104
C5 47U/10V
U2
MX29LV800T/B
/FWE
/FRST
STAND-BY OPTION
RQ7 KSR1102
RQ6 KSA812
D1 KDS114
C70 104
R21 1K
C26 102
C17 104
R66 000
R67 10K
/FOE
/FCE
R16 1K
U3
ES80XX
TDMDX
HD0
HD2
HD1
LRCK
SDAT0
SDAT1
SDAT2
DACLK
SCLK
PLLI
PCLK
RSD1
RWS1
RBCK1
Y1 27.000MHz
R32 100K
C38 27P
C39 27P
L12 BK2125HS102
C35 47U/10V
C36 104
C32 47P
R17 000
SPDIFQ
R40 4.7K
5DVCC
C56 104
CU1
MM74HCU04D
L21 BK2125HS102
Y2 27MHz
R35 1M
C51 22P
C69 22P
CU2
A29040
U7
ESSEMULATOR
64MBSDRAM
U5

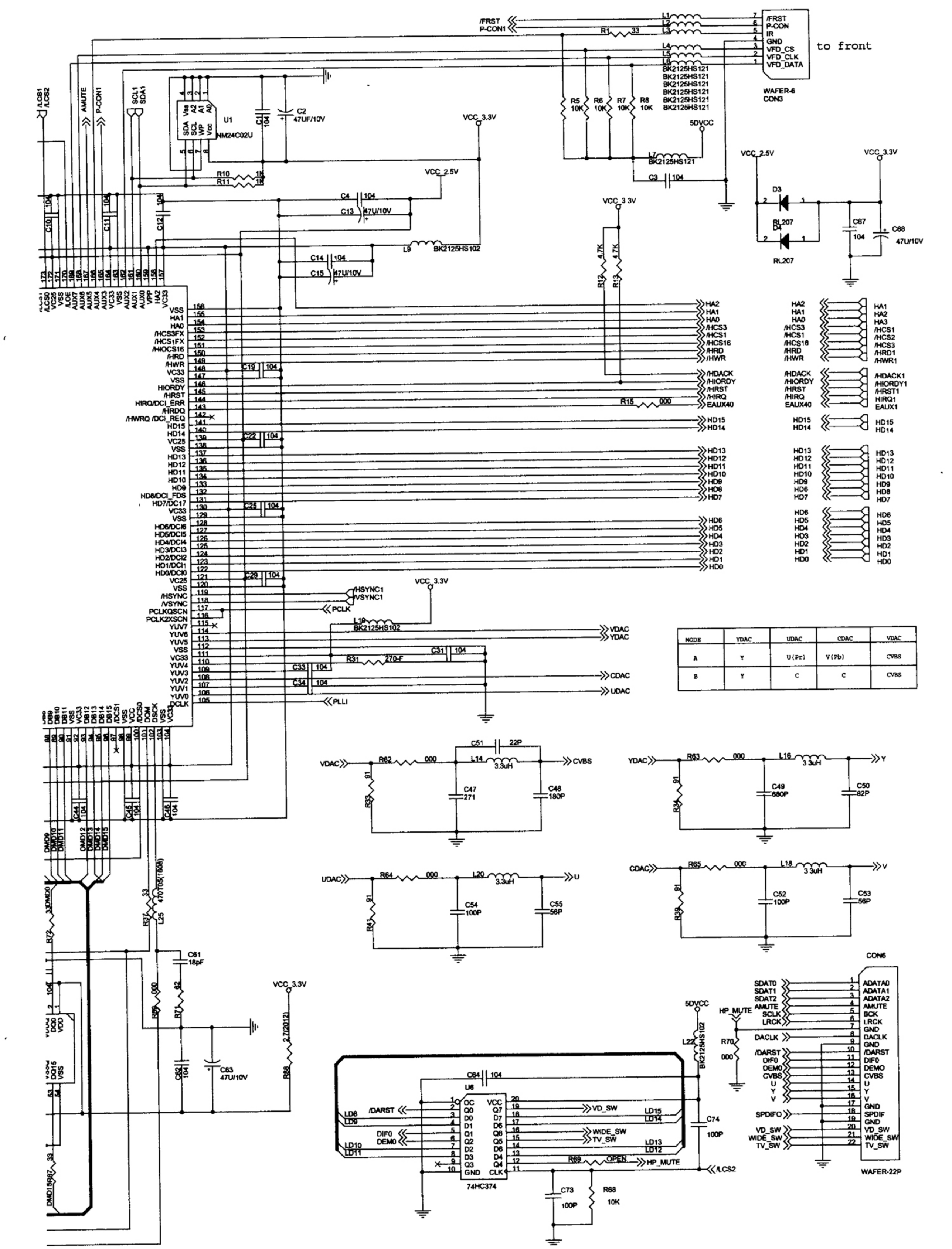

MODE	YDAC	UDAC	CDAC	VDAC
A	Y	U(Pr)	V(Pb)	CVBS
B	Y	C	C	CVBS

Декодер

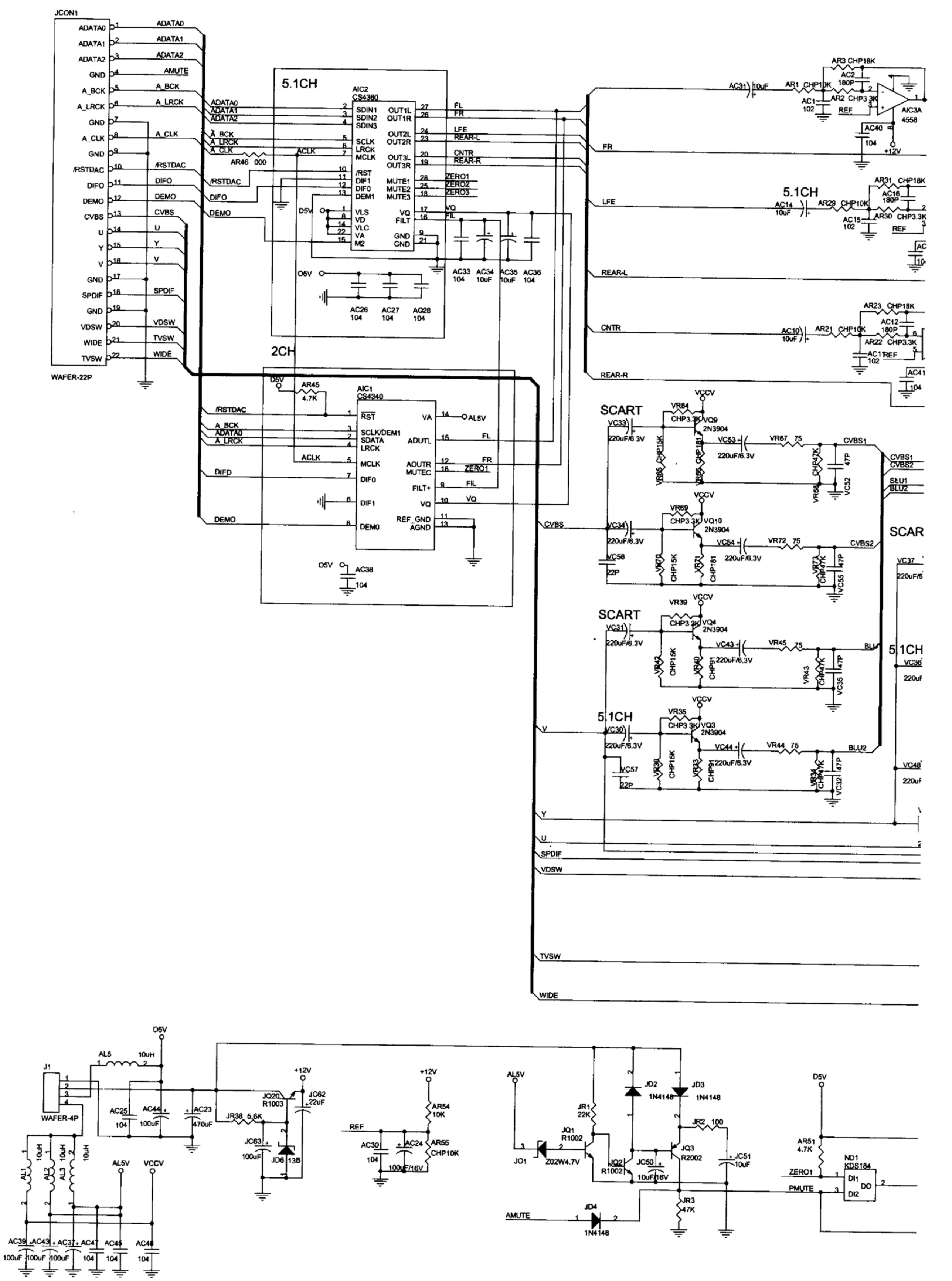
JCON1
WAFER-22P
5.1CH
AIC2
CS4360
2CH
AIC1
CS4340
SCART
5.1CH
SCART
5.1CH
SCART
5.1CH
AIC3A
4558
WAFER-4P
ND1
KDS184

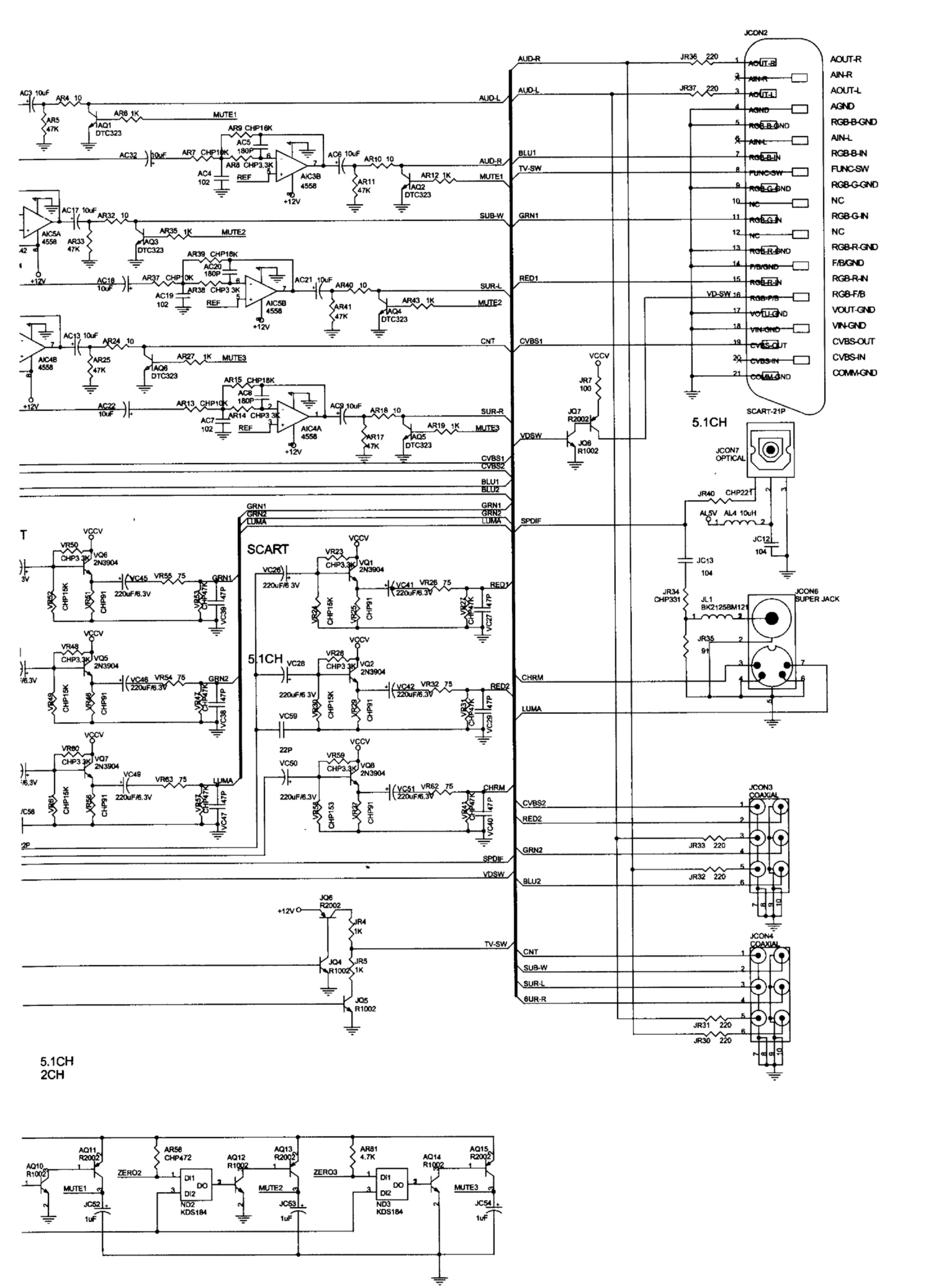

Звуковой процессор 5.1. Разъемы SCART и JACK

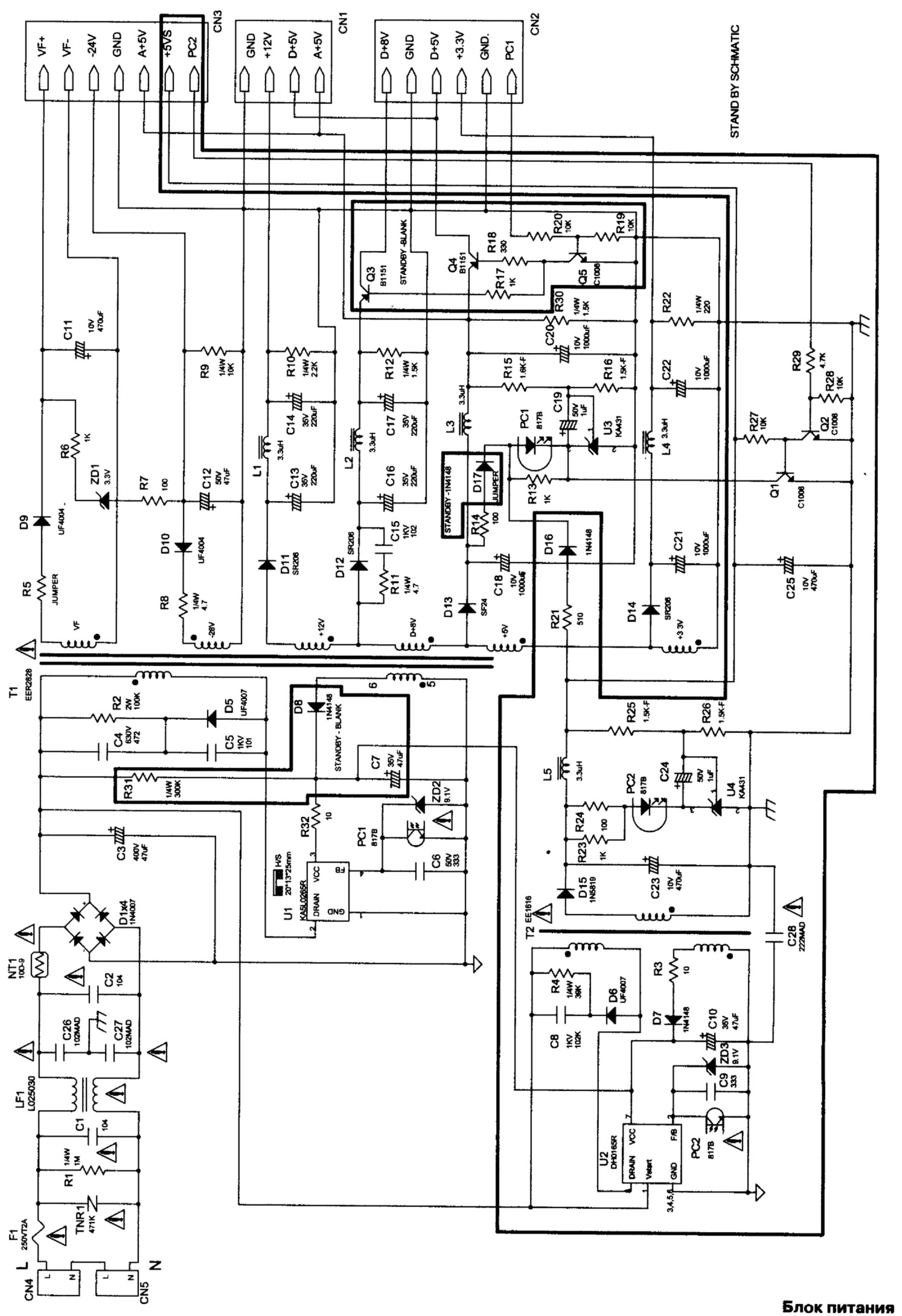

Блок питания