Part No.	Output Detection Voltage Vs (V)	Collector-Ground Voltage VCGO (V)	Collector Current Ic (mA)	Package	Remarks	Fig. No.
SE005N	5.0±0.1	12	20	TO-220		1
SE012N	12.0±0.2	50				
SE015N	15.0±0.2					
SE024N	24.0±0.2					
SE034N	34.0±0.3					
SE040N	40.0±0.4					
SE070N	70.2±0.8	150				
SE080N	80.2±0.8					
SE090N	90.0±0.8					
SE105N	105.2±0.8					
SE110N	110.2±0.8					
SE115N	115.2±0.8					
SE120N	120.2±0.8					
SE125N	125.2±0.8					
SE130N	130.2±0.8					
SE135N	135.2±0.8					
SE140N	141.2±0.8					
SE-B3	141.2±0.6 (IIN=4m, Rc=9.1kΩ Rs=88.7kΩ)				Variable voltage detection Gain adjustment possible	

External Dimensions

• No. 1

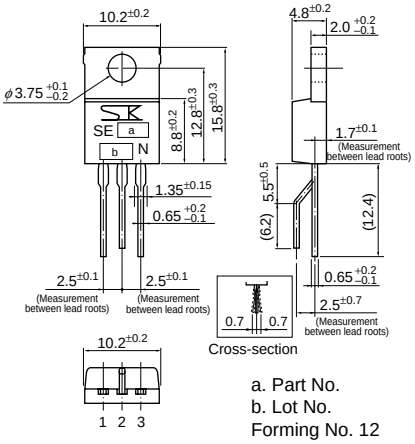

a. Part No.
b. Lot No.
Forming No. 12

(unit: mm)