Bulletin PD-20192 rev. H 12/03

International
IOR Rectifier

16CTQ...
16CTQ...S
16CTQ...-1

SCHOTTKY RECTIFIER

16 Amp

Major Ratings and Characteristics

Characteristics		Values	Units
$I_{F(AV)}$	Rectangular waveform	16	A
V_{RRM}		60/100	V
I_{FSM}	@ tp = 5 µs sine	850	A
V_F	@8Apk, T_J=125°C (per leg)	0.58	V
T_J	range	-55to175	°C

Description/ Features

This center tap Schottky rectifier series has been optimized for low reverse leakage at high temperature. The proprietary barrier technology allows for reliable operation up to 175°C junction temperature. Typical applications are in switching power supplies, converters, free-wheeling diodes, and reverse battery protection.

- 175° C T_J operation
- Center tap configuration
- Low forward voltage drop
- High purity, high temperature epoxy encapsulation for enhanced mechanical strength and moisture resistance
- High frequency operation
- Guard ring for enhanced ruggedness and long term reliability

Case Styles		
16CTQ...	16CTQ...S	16CTQ...-1
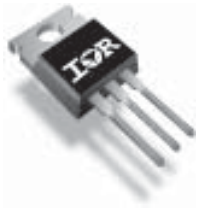		
TO-220	D^2PAK	TO-262

Voltage Ratings

	Parameters	16CTQ060 16CTQ060S 16CTQ060-1	16CTQ80 16CTQ80S 16CTQ80-1	16CTQ100 16CTQ100S 16CTQ100-1
V_R	Max. DC Reverse Voltage (V)	60	80	100
V_{RWM}	Max. Working Peak Reverse Voltage (V)			

Absolute Maximum Ratings

	Parameters	Values	Units	Conditions	
$I_{F(AV)}$	Max. Average Forward (Per Leg)	8	A	50% duty cycle @ T_C = 148°C, rectangular wave form	
	Current * See Fig. 5 (Per Device)	16			
I_{FSM}	Max. Peak One Cycle Non-Repetitive	850	A	5µs Sine or 3µs Rect. pulse	Following any rated load condition and with rated V_{RRM} applied
	Surge Current (Per Leg) * See Fig. 7	275		10ms Sine or 6ms Rect. pulse	
E_{AS}	Non-Repetitive Avalanche Energy (Per Leg)	7.50	mJ	T_J = 25 °C, I_{AS} = 0.50 Amps, L = 60 mH	
I_{AR}	Repetitive Avalanche Current (Per Leg)	0.50	A	Current decaying linearly to zero in 1 µsec Frequency limited by T_J max. V_A = 1.5 x V_R typical	

Electrical Specifications

	Parameters	Values	Units	Conditions	
V_{FM}	Max. Forward Voltage Drop (Per Leg) * See Fig. 1 (1)	0.72	V	@ 8A	T_J = 25 °C
		0.88	V	@ 16A	
		0.58	V	@ 8A	T_J = 125 °C
		0.69	V	@ 16A	
I_{RM}	Max. Reverse Leakage Current (Per Leg) * See Fig. 2 (1)	0.55	mA	T_J = 25 °C	V_R = rated V_R
		7.0	mA	T_J = 125 °C	
$V_{F(TO)}$	Threshold Voltage	0.415	V	T_J = T_J max.	
r_t	Forward Slope Resistance	11.07	mΩ		
C_T	Max. Junction Capacitance (Per Leg)	500	pF	V_R = 5V_{DC}, (test signal range 100Khz to 1Mhz) 25°C	
L_S	Typical Series Inductance (Per Leg)	8.0	nH	Measured lead to lead 5mm from package body	
dv/dt	Max. Voltage Rate of Change (Rated V_R)	10,000	V/ µs		

(1) Pulse Width < 300µs, Duty Cycle <2%

Thermal-Mechanical Specifications

	Parameters		Values	Units	Conditions
T_J	Max. Junction Temperature Range		-55 to 175	°C	
T_{stg}	Max. Storage Temperature Range		-55 to 175	°C	
R_{thJC}	Max. Thermal Resistance Junction to Case (Per Leg)		3.25	°C/W	DC operation
R_{thJC}	Max. Thermal Resistance Junction to Case (Per Package)		1.63	°C/W	DC operation
R_{thCS}	Typical Thermal Resistance, Case to Heatsink		0.50	°C/W	Mounting surface, smooth and greased (only for TO-220)
wt	Approximate Weight		2(0.07)	g(oz.)	
T	Mounting Torque	Min.	6(5)	Kg-cm (lbf-in)	
		Max.	12(10)		

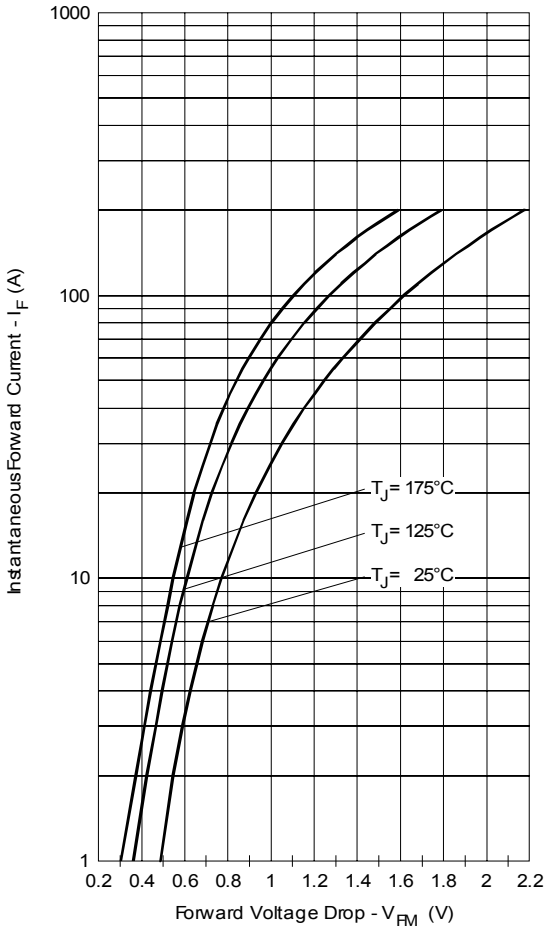

Fig. 1 - Max. Forward Voltage Drop Characteristics (Per Leg)

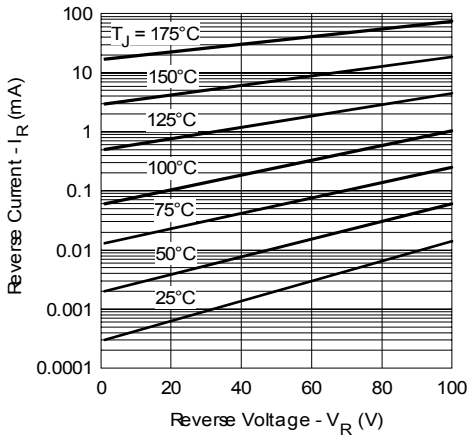

Fig. 2 - Typical Values Of Reverse Current Vs. Reverse Voltage (Per Leg)

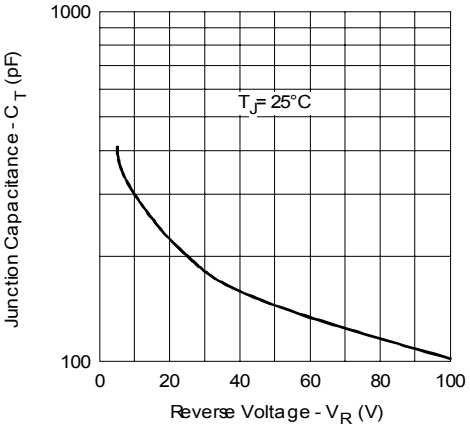

Fig. 3 - Typical Junction Capacitance Vs. Reverse Voltage (Per Leg)

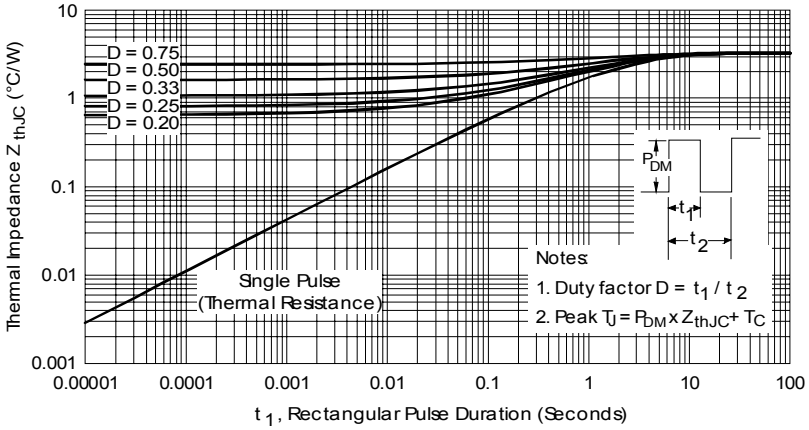

Fig. 4 - Max. Thermal Impedance Z_{thJC} Characteristics (Per Leg)

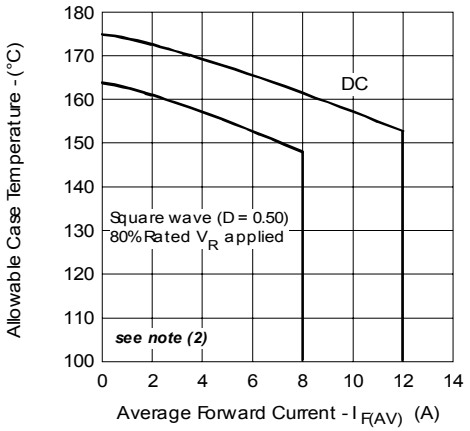

Fig. 5 - Max. Allowable Case Temperature Vs. Average Forward Current (Per Leg)

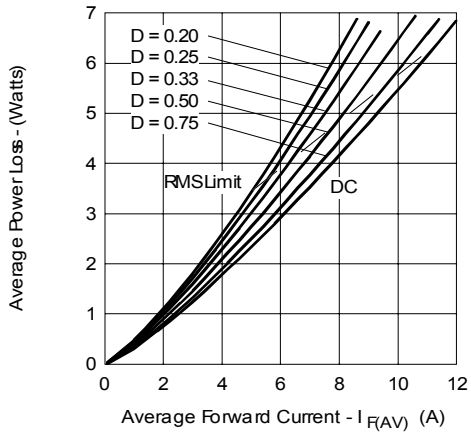

Fig. 6 - Forward Power Loss Characteristics (Per Leg)

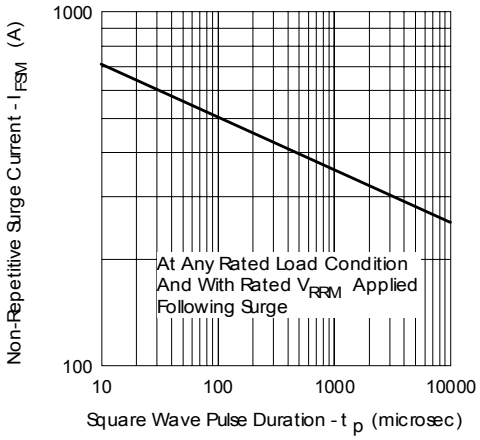

Fig. 7 - Max. Non-Repetitive Surge Current (Per Leg)

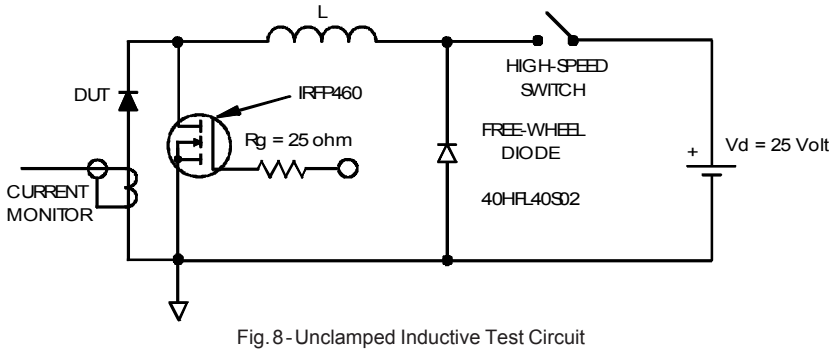

Fig. 8 - Unclamped Inductive Test Circuit

(2) Formula used: $T_C = T_J - (Pd + Pd_{REV}) \times R_{thJC}$;
Pd = Forward Power Loss = $I_{F(AV)} \times V_{FM}$ @ ($I_{F(AV)}$ / D) (see Fig. 6);
Pd_{REV} = Inverse Power Loss = $V_{R1} \times I_R (1 - D)$; I_R @ V_{R1} = 10 V

Outline Table

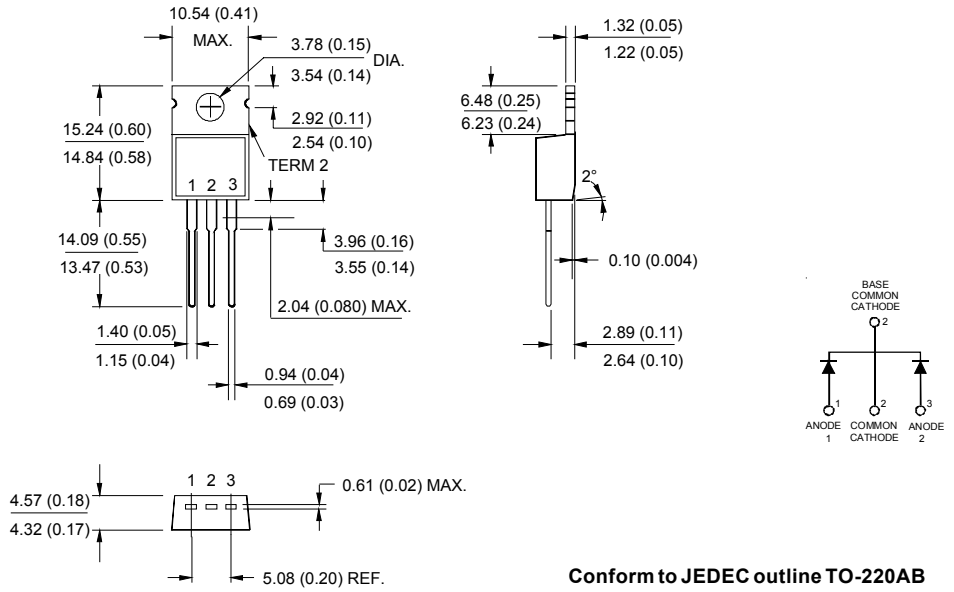

Conform to JEDEC outline TO-220AB
Dimensions in millimeters and (inches)

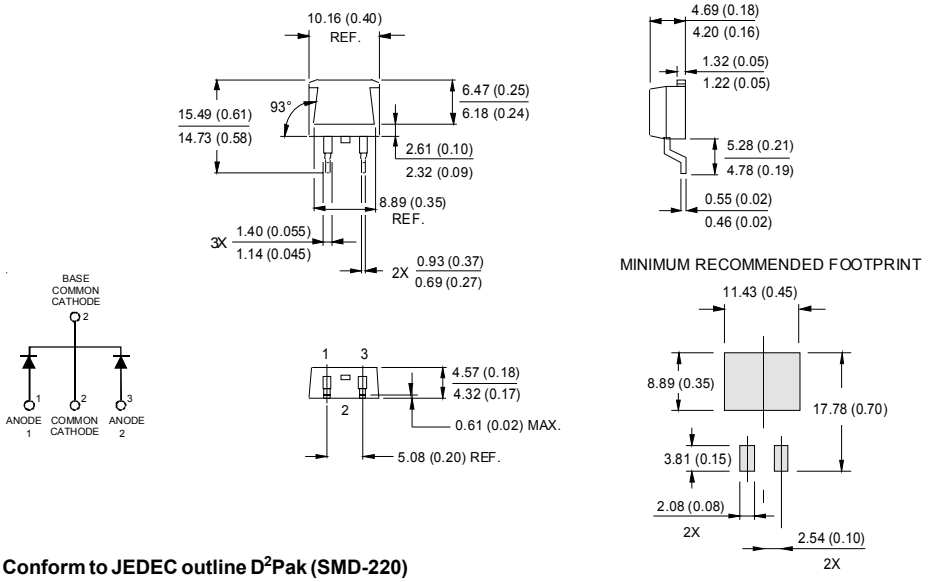

Conform to JEDEC outline D^2Pak (SMD-220)
Dimensions in millimeters and (inches)

Outline Table

Modified JEDEC outline TO-262
Dimensions in millimeters and (inches)

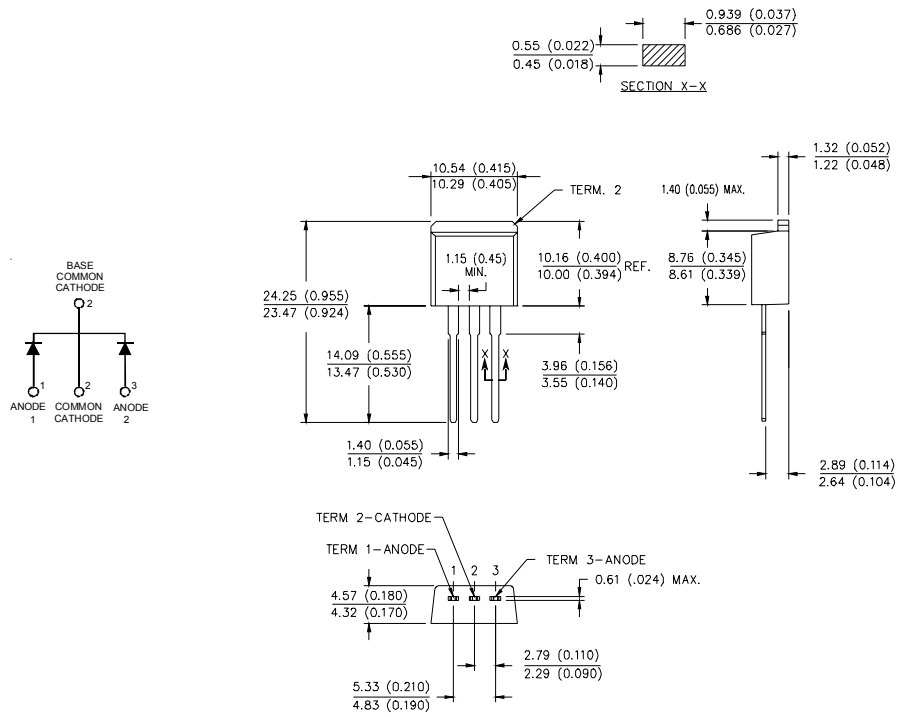

Marking Information

EXAMPLE: THIS IS A 16CTQ100S WITH
LOT CODE 58 07
ASSEMBLED ON WW 21, 2000
IN THE ASSEMBLY LINE "L"

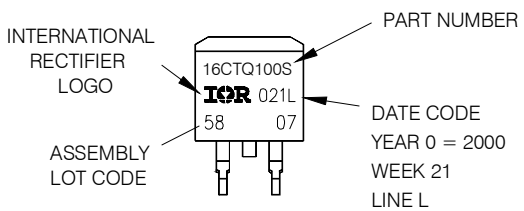

Tape & Reel Information

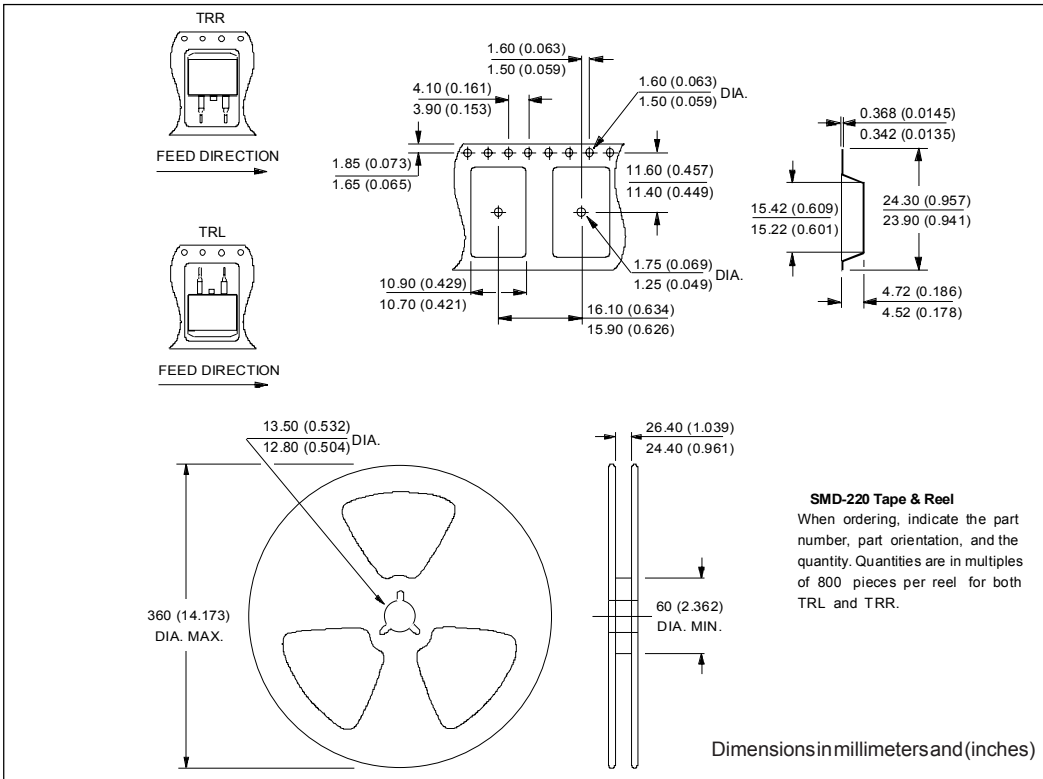

SMD-220 Tape & Reel
When ordering, indicate the part number, part orientation, and the quantity. Quantities are in multiples of 800 pieces per reel for both TRL and TRR.

Dimensions in millimeters and (inches)

Ordering Information Table

Device Code

16	C	T	Q	100	-1
(1)	(2)	(3)	(4)	(5)	(6)

1	-	Essential Part Number
2	-	C = Common Cathode
3	-	T = TO-220
4	-	Q = Schottky Q Series
5	-	Voltage Rating
6	-	1 = TO-262 S = D^2Pak

060 = 60V
080 = 80V
100 = 100V

```
16CTQ100
****************************************
* SPICE Model Diode                    *
****************************************
.SUBCKT 16CTQ100 ANO CAT
D1 ANO 1 DMOD (0.07089)
*Define diode model
.MODEL DMOD D(IS=21.21E-06,N=1.578,Rs=7.804E-03,Ikf=0.9497, Xti=2, Eg=1.11
+ Cjo=1.278E-09, M=0.4736, Vj=0.4972, Fc=0.5, Irs=1.114e-21, Nr=4.755,
+ Bv=119.9, Ibv=215.5E-06, Tt=18.2E-09)
****************************************

.ENDS 16CTQ100


Thermal Model Subcircuit
.SUBCKT 16CTQ100  5 1

CTHERM1       5    4      1.45E+00
CTHERM2       4    3      4.54E+00
CTHERM3       3    2      1.09E+01
CTHERM4       2    1      1.01E+02

RTHERM1       5    4      2.49E+00
RTHERM2       4    3      5.20E-04
RTHERM1       3    2      5.43E-01
RTHERM1       2    1      3.05E-02


.ENDS 16CTQ100
```

Data and specifications subject to change without notice.
This product has been designed and qualified for Industrial Level.
Qualification Standards can be found on IR's Web site.

International
IOR Rectifier

IR WORLD HEADQUARTERS: 233 Kansas St., El Segundo, California 90245, USA Tel: (310) 252-7105
TAC Fax: (310) 252-7309
Visit us at www.irf.com for sales contact information. 12/03